torso
doors

Torso products technical datasheets
2022-05-25

Table of content

optimal interior doors

Painted, massive framed door, CLASSIC profile 7
Available designs and proportions 8
Painted, massive framed door, CLASSIC glass profile 9
Available designs and proportions 10
Painted, massive framed door, TREND100 profile 11
Available designs and proportions 12
Painted, massive framed door, TREND100 glass profile 13
Available designs and proportions 14
Painted, massive framed door, TREND120 profile 15
Available designs and proportions 16
Painted, massive framed door, TREND120 glass profile 17
Available designs and proportions 18
Painted, light cell and light form pressed doors 19
Available designs 20
Painted, compact stable door 21
Available designs 22
Painted, compact form pressed door 23
Available designs 24

optimal interior frames

Frames for interior doors 25
optSWE 92, optSWE-NOR 92 frame - top 26
optSWE 92, optSWE-NOR 92 frame - sides 27
optSMP 100/130 frame - top 28
optSMP 100/130 frame - sides 29

master interior thresholds

Thresholds for interior doors 30
Thresholds for SWE, SWE-NOR, SWE-FLEX, SWE-NOR-FLEX frame 31

Table of content

master plus interior doors

Painted, massive framed door, CLASSIC profile 32
Available designs 33
Painted, massive framed door, CLASSIC glass profile 34
Available designs 35
Painted, massive framed door, CLASSIC DS-TR profile 36
Available designs 37
Painted, massive framed door, TREND100 profile 38
Available designs 39
Painted, massive framed door, TREND100 glass profile 40
Available designs 41
Painted, massive framed door, TREND105 profile 42
Available designs 43
Painted, massive framed door, TREND105 glass profile 44
Available designs 45
Painted, massive framed door, TREND120 profile 46
Available designs 47
Painted, massive framed door, TREND120 glass profile 48
Available designs 49
Painted, massive framed door, TREND-CLASSIC DESIGN profile 50
Available designs 51
Painted, massive framed door, TREND DESIGN-RNG glass profile 52
Available designs 53
Painted, massive framed door, TREND DESIGN-SQU glass profile 54
Available designs 55
Painted, light cell and light form pressed door 56
Available designs 57
Painted, light cell and light form pressed door 58
Available designs 59
Painted, stable compact door 60
Available designs 61
Painted, stable compact cell glass door 62
Available designs 63
Painted, stable compact cell glass door 64
Available designs 65
Painted, massive compact cell and compact form pressed door 66
Available designs 67
Painted, massive compact cell and compact form pressed door 68
Available designs 69

Table of content

master plus — interior sliding doors

Sliding type doors, painted massive framed door 70
Available designs, CLASSIC and TREND100 profile 71
Available designs, TREND105 and TREND120 profile 72
Available designs, DESIGN profile 73
Sliding type doors, painted light cell and light form pressed door 74
Available designs 75
Sliding type doors, painted stable compact door 76
Available designs 77
Sliding type doors, painted massive compact cell and form pressed door 78
Available designs 79

master plus — interior frames

Painted frames for interior doors 80
SWE 68-147, SWE-NOR 92 frame - top 81
SWE 68-147, SWE-NOR 92 frame - sides 82
SWE-FLEX 75-147, SWE-NOR-FLEX 92 frame - top 83
SWE-FLEX 75-147, SWE-NOR-FLEX 92 frame - sides 84

master plus — interior thresholds

Thresholds for interior doors 85
Thresholds for SWE, SWE-NOR, SWE-FLEX, SWE-NOR-FLEX frame 86

master plus — interior inserts

Painted inserts for interior doors 87

dimensions — interior doors

Gaps between door leaf and frame for single doors 88
Gaps between door leaf and frame for double doors 89
Interior doors dimensions table 90

master plus — interior doors

Painted moldings for interior doors 91
Painted flex moldings for interior doors 92
Moldings for interior doors dimensions table 93

Table of content

optimal exterior doors

Natural plywood, exterior door 94
Available designs 95

optimal exterior frames

Frames for exterior doors 96
40x92 SWE, 40x92 SWE-NOR frame - top 97
40x92 SWE, 40x92 SWE-NOR frame - sides 98

optimal exterior thresholds

Thresholds for exterior doors 40x92SWE, 40x92 SWE-NOR 99
40x92 SWE, 40x92 SWE-NOR exterior thresholds 100

dimensions exterior doors

Gaps between door leaf and frame for single doors 101
Gaps between door leaf and frame for double doors 102
Natural plywood, exterior doors dimensions table 103

optimal exterior doors

Painted, exterior doors 104
Available designs 105

optimal exterior frames

Frames for exterior doors 106
42x105, 42x115, 42x105NOR, 42x115NOR frame - top 107
42x105, 42x115, 42x105NOR, 42x115NOR frame - sides 108
42x105/115 vinkel, 42x105/115NOR vinkel frame - sides 109

optimal exterior thresholds

Thresholds for exterior doors 110
26x105, 26x115 exterior thresholds 111

Table of content

master plus exterior doors

Painted, exterior doors 112
Available designs 113

master plus exterior frames

Frames for exterior doors 114
42x105, 42x115, 42x105NOR, 42x115NOR frame - top 115
42x105, 42x115, 42x105NOR, 42x115NOR frame - sides 116

master plus exterior thresholds

Thresholds for exterior doors 117
Thresholds for exterior doors (hybrid) 118
26x105, 26x115, 26x105 hybrid, 26x115 hybrid exterior thresholds 119

dimensions exterior doors

Gaps between door leaf and frame for single doors 120
Gaps between door leaf and frame for double doors 121
Painted, exterior doors dimensions table 122

Painted, massive framed door, CLASSIC profile

General information	
Product name	optFINLAND painted, optNORGE painted
Class	unclassified
Door thickness size	40mm
Sound transmittance	23dB
Weight (M21x9)	Door leaf - 26kg Frame SWE 92mm - 7kg
Glass	-
Decoration	1 layer - primer, 1 layer - UV paint
Standart color	NCS S0502-Y, gloss 25, eco-friendly, water based
Standard fittings	Lock: 2014; hinges: 6540KS 2 pcs;
Frames	SWE, SWE-NOR, SWE-FLEX, SWE-NOR-FLEX, SMP
Thresholds	E oak, B oak, BB oak, SMP
Non-standard size production	Available at master plus
Decoration according NCS / RAL	Available at optimal plus (NCS S0500-N, NCS S7500-N, NCS S8500-N)
Other glazing options	-
Other lock case and hinges options	Available at master plus
Units per pallet	20 pcs. A pallet consist one model and one size product
Product quality warranty	3 years

Size standard production	M21	M20.5	M20	M19
M4	-	-	-	-
M5	-	-	-	-
M7	+	-	+	-
M8	+	-	+	-
M9	+	-	+	-
M10	+	-	+	-

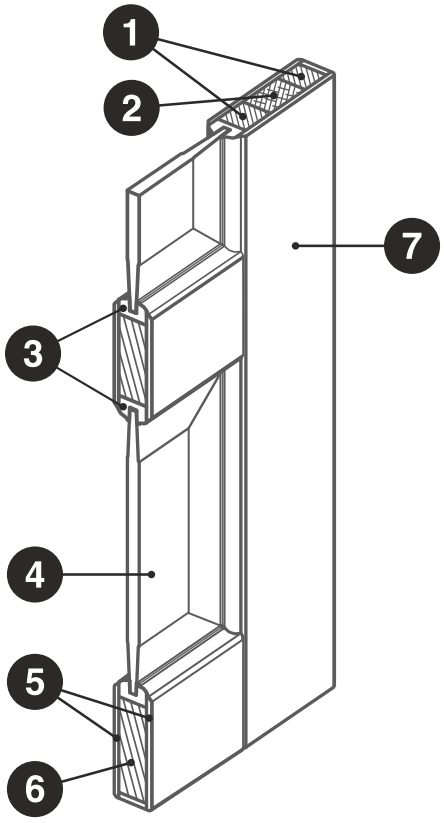

Profile structure

1. Wood
2. Medium density particle (MDP)
3. Medium density fiberboard (MDF)
4. Medium density fiberboard (MDF) panel
5. High density fiberboard (HDF)
6. Wood
7. Painted surface

Available designs and proportions

optFINLAND

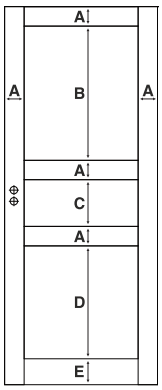

M height	M21	M20.5	M20	M19
Size height	2040	-	1940	-
A	105	-	105	-
B	724	-	684	-
C	252	-	232	-
D	609	-	569	-
E	140	-	140	-

optNORGE

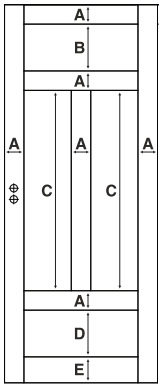

M height	M21	M20.5	M20	M19
Size height	2040	-	1940	-
A	105	-	105	-
B	252	-	232	-
C	1081	-	1021	-
D	252	-	232	-
E	140	-	140	-

Painted, massive framed door, CLASSIC glass profile

General information	
Product name	optFINLAND 6SP glass painted, optNORGE 10SP glass painted, optISLAND 12SP glass painted
Class	unclassified
Door thickness size	40mm
Sound transmittance	23dB
Weight (M21x9)	Door leaf - 24kg Frame SWE 92mm - 7kg
Glass	Glass are intergrated into construction All glass doors in a stock program are supplied with transparent glass All glass are shatterproof
Decoration	1 layer - primer, 1 layer - UV paint
Standart color	NCS S0502-Y, gloss 25, eco-friendly, water based
Standard fittings	Lock: 2014; hinges: 6540KS 2 pcs;
Frames	SWE, SWE-NOR, SWE-FLEX, SWE-NOR-FLEX, SMP
Thresholds	E oak, B oak, BB oak, SMP
Non-standard size production	Available at master plus
Decoration according NCS / RAL	Available at optimal plus (NCS S0500-N, NCS S7500-N, NCS S8500-N)
Other glazing options	-
Other lock case and hinges options	Available at master plus
Units per pallet	20 pcs. A pallet consist one model and one size product
Product quality warranty	3 years

Size standard production	M21	M20.5	M20	M19
M4	-	-	-	-
M5	-	-	-	-
M7	-	-	-	-
M8	+	-	-	-
M9	+	-	-	-
M10	+	-	+	-

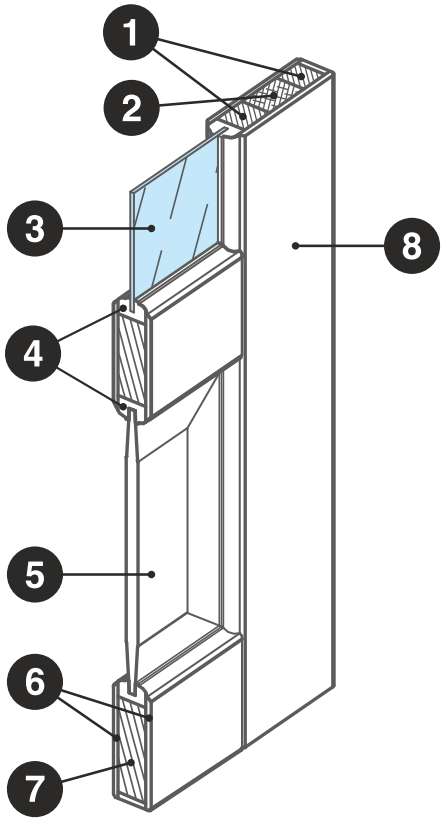

Profile structure

1. Wood
2. Medium density particle (MDP)
3. Glass
4. Medium density fiberboard (MDF)
5. Medium density fiberboard (MDF) panel
6. High density fiberboard (HDF)
7. Wood
8. Painted surface

Available designs and proportions

optFINLAND 6SP

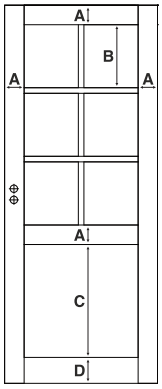

optFINLAND 6SP

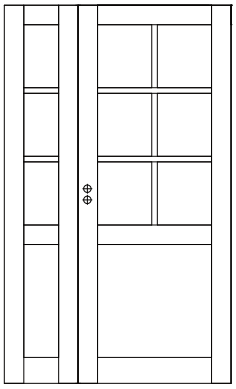

optFINLAND 6SP

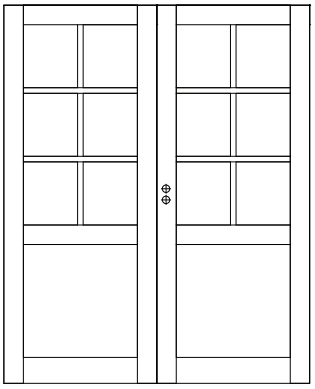

M height	M21	M20.5	M20	M19
Size height	2040	-	1940	-
A	105	-	105	-
B	340	-	320	-
C	609	-	569	-
D	140	-	140	-

optNORGE 10SP

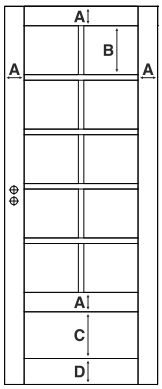

optNORGE 10SP

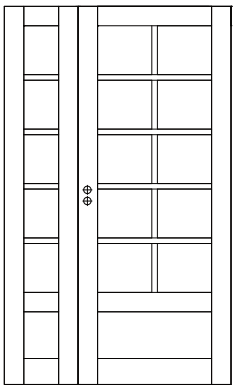

optNORGE 10SP

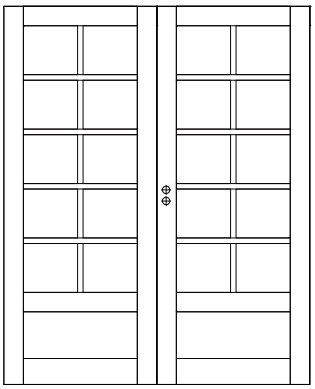

M height	M21	M20.5	M20	M19
Size height	2040	-	1940	-
A	105	-	105	-
B	267	-	250	-
C	235	-	218	-
D	140	-	140	-

optISLAND 12SP

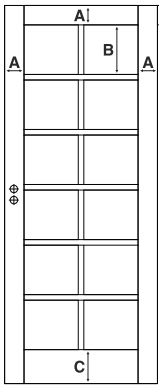

optISLAND 12SP

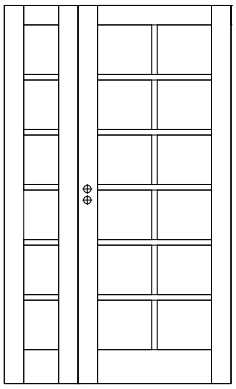

optISLAND 12SP

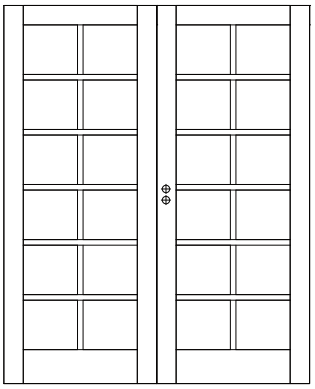

M height	M21	M20.5	M20	M19
Size height	2040	-	1940	-
A	105	-	105	-
B	267	-	250	-
C	183	-	183	-

Painted, massive framed door, TREND100 profile

General information	
Product name	optTREND100-1 painted, optTREND100-3 painted
Class	unclassified
Door thickness size	40mm
Sound transmittance	23dB
Weight (M21x9)	Door leaf - 22kg Frame SWE 92mm - 7kg
Glass	-
Decoration	1 layer - primer, 1 layer - UV paint
Standart color	NCS S0502-Y, gloss 25, eco-friendly, water based
Standard fittings	Lock: 2014; hinges: 6540KS 2 pcs;
Frames	SWE, SWE-NOR, SWE-FLEX, SWE-NOR-FLEX, SMP
Thresholds	E oak, B oak, BB oak, SMP
Non-standard size production	Available at master plus
Decoration according NCS / RAL	Available at optimal plus (NCS S0500-N, NCS S7500-N, NCS S8500-N)
Other glazing options	-
Other lock case and hinges options	Available at master plus
Units per pallet	20 pcs. A pallet consist one model and one size product
Product quality warranty	3 years

Size standard production	M21	M20.5	M20	M19
M4	-	-	-	-
M5	-	-	-	-
M7	+	-	+	+
M8	+	-	+	+
M9	+	-	+	+
M10	+	-	+	+

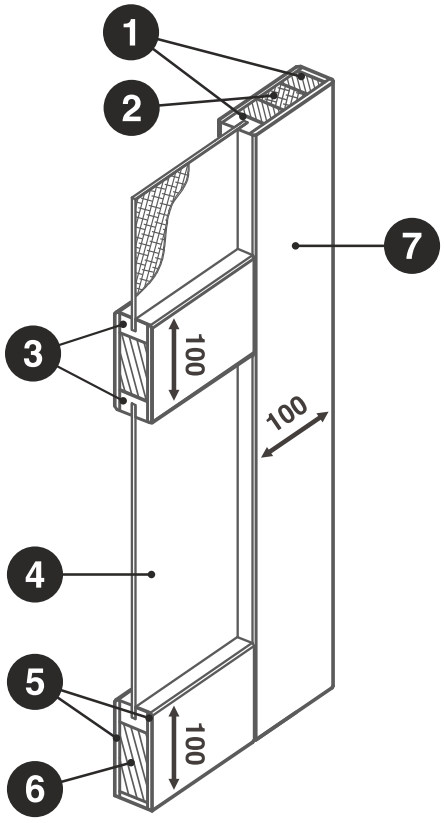

Profile structure

1. Wood
2. Medium density particle (MDP)
3. Medium density fiberboard (MDF)
4. Medium density fiberboard (MDF) panel
5. High density fiberboard (HDF)
6. Wood
7. Painted surface

Available designs and proportions

optTREND100-1

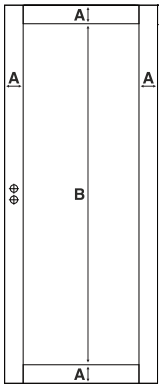

M height	M21	M20.5	M20	M19
Size height	2040	-	1940	1840
A	100	-	100	100
B	1840	-	1740	1640

optTREND100-3

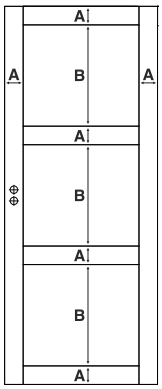

M height	M21	M20.5	M20	M19
Size height	2040	-	1940	1840
A	100	-	100	100
B	546	-	513	480

Painted, massive framed door, TREND100 glass profile

General information	
Product name	optTREND100-1SP glass painted, optTREND100-3SP glass painted
Class	unclassified
Door thickness size	40mm
Sound transmittance	23dB
Weight (M21x9)	Door leaf - 20kg Frame SWE 92mm - 7kg
Glass	Glass are intergrated into construction All glass doors in a stock program are supplied with transparent glass All glass are shatterproof
Decoration	1 layer - primer, 1 layer - UV paint
Standart color	NCS S0502-Y, gloss 25, eco-friendly, water based
Standard fittings	Lock: 2014; hinges: 6540KS 2 pcs;
Frames	SWE, SWE-NOR, SWE-FLEX, SWE-NOR-FLEX, SMP
Thresholds	E oak, B oak, BB oak, SMP
Non-standard size production	Available at master plus
Decoration according NCS / RAL	Available at optimal plus (NCS S0500-N, NCS S7500-N, NCS S8500-N)
Other glazing options	-
Other lock case and hinges options	Available at master plus
Units per pallet	20 pcs. A pallet consist one model and one size product
Product quality warranty	3 years

Size standard production	M22	M21	M20.5	M20	M19
M4	-	+	-	+	+
M5	-	-	-	-	-
M7	-	+	-	+	+
M8	-	+	-	+	+
M9	+	+	-	+	+
M10	+	+	-	+	+

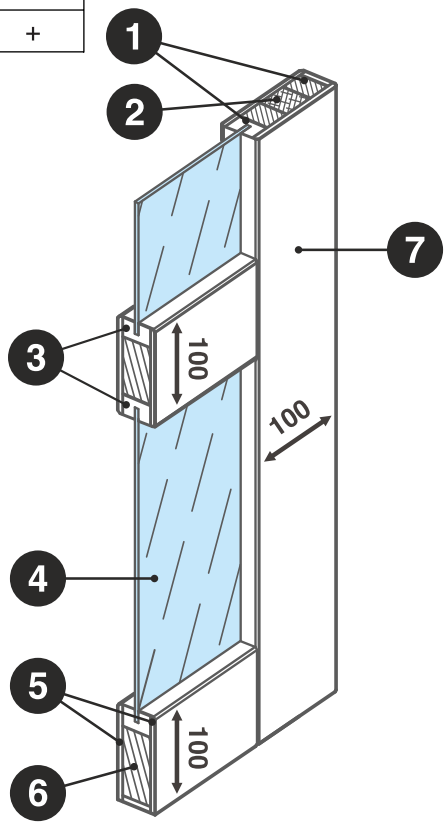

Profile structure

1. Wood
2. Medium density particle (MDP)
3. Medium density fiberboard (MDF)
4. Glass
5. High density fiberboard (HDF)
6. Wood
7. Painted surface

Available designs and proportions

optTREND100-1SP

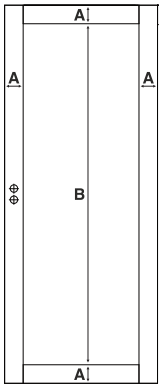

optTREND100-1SP

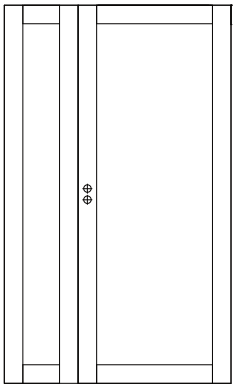

optTREND100-1SP

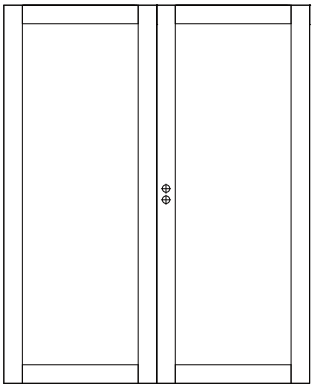

M height	M21	M20.5	M20	M19
Size height	2040	-	1940	1840
A	100	-	100	100
B	1840	-	1740	1640

optTREND100-3SP

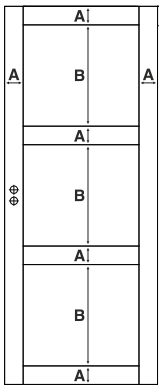

optTREND100-3SP

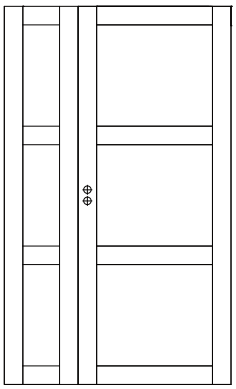

optTREND100-3SP

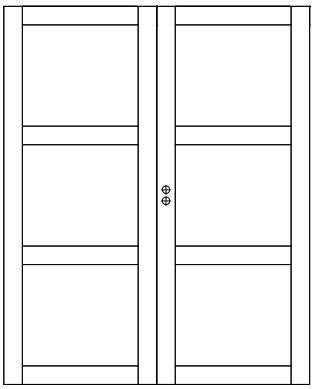

M height	M22	M21	M20.5	M20	M19
Size height	2140	2040	-	1940	1840
A	100	100	-	100	100
B	580	546	-	513	480

Painted, massive framed door, TREND120 profile

General information	
Product name	optTREND120-1 painted, optTREND120-3 painted
Class	unclassified
Door thickness size	40mm
Sound transmittance	23dB
Weight (M21x9)	Door leaf - 24kg Frame SWE 92mm - 7kg
Glass	-
Decoration	1 layer - primer, 1 layer - UV paint
Standart color	NCS S0502-Y, gloss 25, eco-friendly, water based
Standard fittings	Lock: 2014; hinges: 6540KS 2 pcs;
Frames	SWE, SWE-NOR, SWE-FLEX, SWE-NOR-FLEX, SMP
Thresholds	E oak, B oak, BB oak, SMP
Non-standard size production	Available at master plus
Decoration according NCS / RAL	Available at optimal plus (NCS S0500-N, NCS S7500-N, NCS S8500-N)
Other glazing options	-
Other lock case and hinges options	Available at master plus
Units per pallet	20 pcs. A pallet consist one model and one size product
Product quality warranty	3 years

Size standard production	M21	M20.5	M20	M19
M4	-	-	-	-
M5	-	-	-	-
M7	+	-	+	+
M8	+	-	+	+
M9	+	-	+	+
M10	+	-	+	+

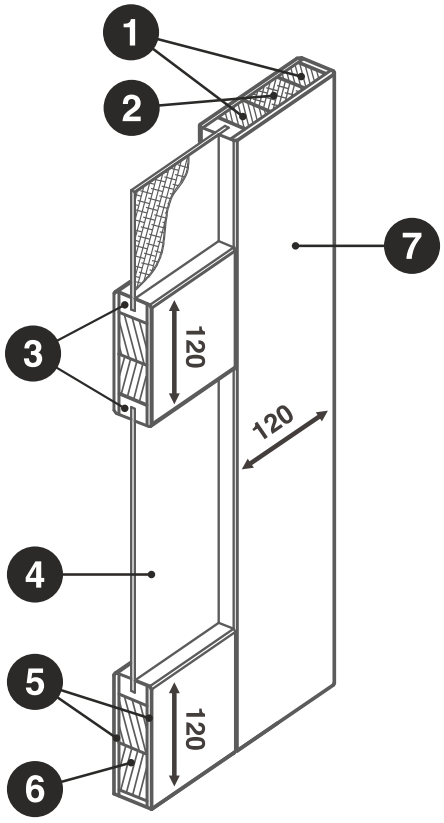

Profile structure

1. Wood
2. Medium density particle (MDP)
3. Medium density fiberboard (MDF)
4. Medium density fiberboard (MDF) panel
5. High density fiberboard (HDF)
6. Wood
7. Painted surface

Available designs and proportions

optTREND120-1

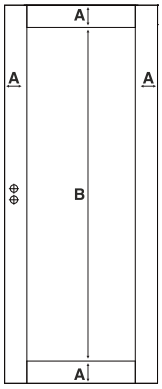

M height	M21	M20.5	M20	M19
Size height	2040	-	1940	1840
A	120	-	120	120
B	1800	-	1700	1600

optTREND120-3

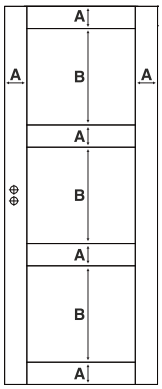

M height	M21	M20.5	M20	M19
Size height	2040	-	1940	1840
A	120	-	120	120
B	520	-	486	453

Painted, massive framed door, TREND120 glass profile

General information	
Product name	optTREND120-1SP glass painted, optTREND120-3SP glass painted
Class	unclassified
Door thickness size	40mm
Sound transmittance	23dB
Weight (M21x9)	Door leaf - 23kg Frame SWE 92mm - 7kg
Glass	Glass are intergrated into construction All glass doors in a stock program are supplied with transparent glass All glass are shatterproof
Decoration	1 layer - primer, 1 layer - UV paint
Standart color	NCS S0502-Y, gloss 25, eco-friendly, water based
Standard fittings	Lock: 2014; hinges: 6540KS 2 pcs;
Frames	SWE, SWE-NOR, SWE-FLEX, SWE-NOR-FLEX, SMP
Thresholds	E oak, B oak, BB oak, SMP
Non-standard size production	Available at master plus
Decoration according NCS / RAL	Available at optimal plus (NCS S0500-N, NCS S7500-N, NCS S8500-N)
Other glazing options	-
Other lock case and hinges options	Available at master plus
Units per pallet	20 pcs. A pallet consist one model and one size product
Product quality warranty	3 years

Size standard production	M21	M20.5	M20	M19
M4	+	-	+	+
M5	-	-	-	-
M7	+	-	+	+
M8	+	-	+	+
M9	+	-	+	+
M10	+	-	+	+

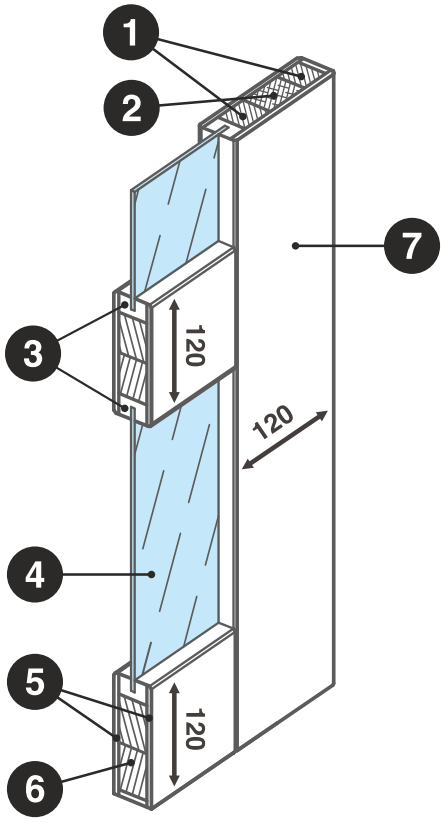

Profile structure

1. Wood
2. Medium density particle (MDP)
3. Medium density fiberboard (MDF)
4. Glass
5. High density fiberboard (HDF)
6. Wood
7. Painted surface

Available designs and proportions

optTREND120-1SP

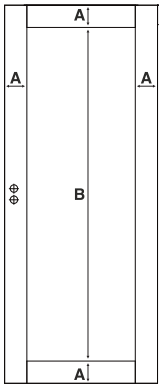

optTREND120-1SP

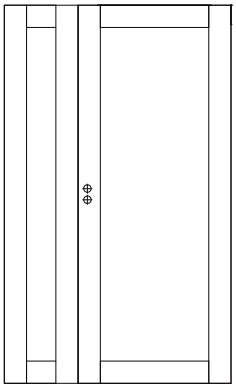

optTREND120-1SP

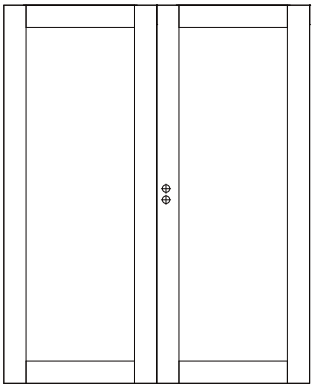

M height	M21	M20.5	M20	M19
Size height	2040	-	1940	1840
A	120	-	120	120
B	1800	-	1700	1600

optTREND120-3SP

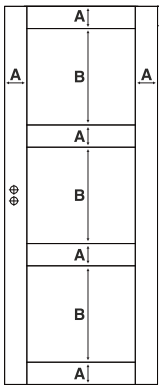

optTREND120-3SP

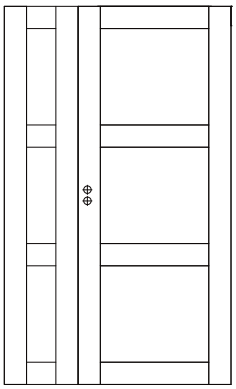

optTREND120-3SP

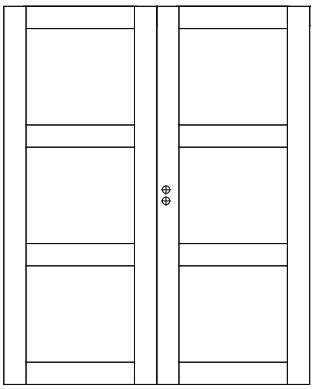

M height	M21	M20.5	M20	M19
Size height	2040	-	1940	1840
A	120	-	120	120
B	520	-	486	453

Painted, light cell and light form pressed doors

General information	
Product name	optLANA form press painted, optFINLAND 3SYM form press painted, optNORGE 4SYM form press painted
Class	unclassified
Door thickness size	40mm
Sound transmittance	13dB
Weight (M21x9)	Door leaf - 17kg Frame SWE 92mm - 7kg
Glass	-
Decoration	1 layer - primer, 1 layer - UV paint
Standart color	NCS S0502-Y, gloss 25, eco-friendly, water based
Standard fittings	Lock: 2014; hinges: 6540KS 2 pcs;
Frames	SWE, SWE-NOR, SWE-FLEX, SWE-NOR-FLEX, SMP
Thresholds	E oak, B oak, BB oak, SMP
Non-standard size production	Available at master plus
Decoration according NCS / RAL	Available at optimal plus (NCS S0500-N, NCS S7500-N, NCS S8500-N)
Other glazing options	-
Other lock case and hinges options	Available at master plus
Units per pallet	25 pcs. A pallet consist one model and one size product
Product quality warranty	3 years

Size standard production	M21	M20.5	M20	M19
M4	-	-	-	-
M5	-	-	-	-
M7	+	+	+	+
M8	+	+	+	+
M9	+	+	+	+
M10	-	-	-	-

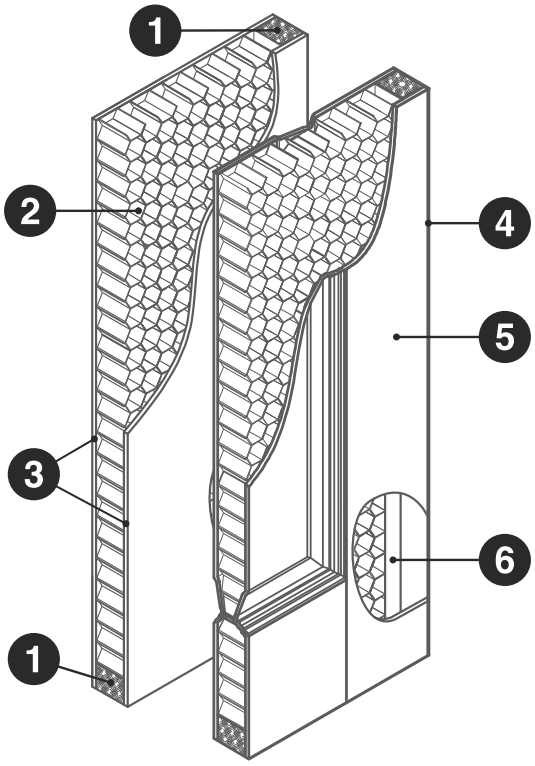

Profile structure

1. Medium density fiberboard (MDF) rail
2. Carton honeycomb core
3. High density fiberboard (HDF)
4. Melamine edgeband
5. Painted surface
6. Pine bar

Available designs

optLANA

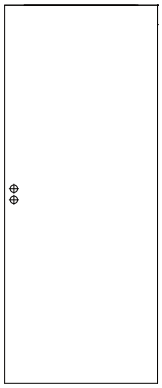

optFINLAND 3SYM

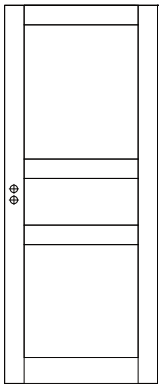

optNORGE 4SYM

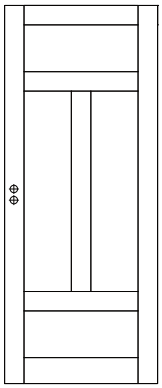

Painted, compact stable door

General information	
Product name	optLANA STABLE painted
Class	unclassified
Door thickness size	40mm
Sound transmittance	23dB
Weight (M21x9)	Door leaf - 24kg Frame SWE 92mm - 7kg
Glass	-
Decoration	1 layer - primer, 1 layer - UV paint
Standart color	NCS S0502-Y, gloss 25, eco-friendly, water based
Standard fittings	Lock: 2014; hinges: 6540KS 2 pcs;
Frames	SWE, SWE-NOR, SWE-FLEX, SWE-NOR-FLEX, SMP
Thresholds	E oak, B oak, BB oak, SMP
Non-standard size production	Available at master plus
Decoration according NCS / RAL	Available at optimal plus (NCS S0500-N, NCS S7500-N, NCS S8500-N)
Other glazing options	-
Other lock case and hinges options	Available at master plus
Units per pallet	20 pcs. A pallet consist one model and one size product
Product quality warranty	3 years

Size standard production	M21	M20.5	M20	M19
M4	-	-	-	-
M5	-	-	-	-
M7	+	+	+	+
M8	+	+	+	+
M9	+	+	+	+
M10	+	+	+	+

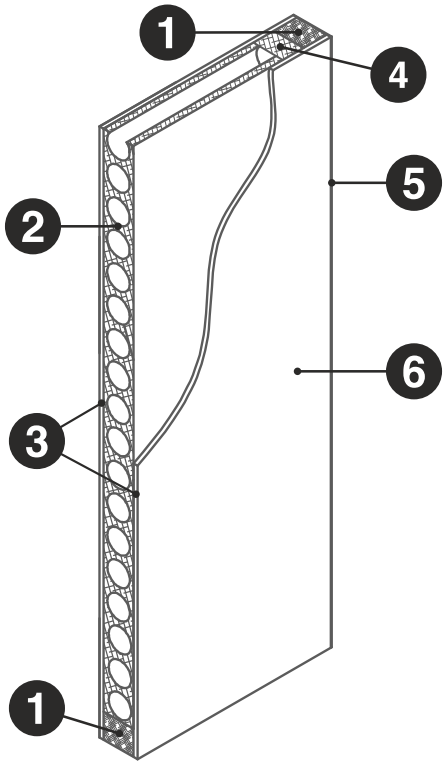

Profile structure

1. Medium density fiberboard (MDF)
2. Chipboard tubular core
3. High density fiberboard (HDF)
4. Medium density particleboard (MDP)
5. Melamine edgeband
6. Painted surface

Available designs

optLANA STABLE

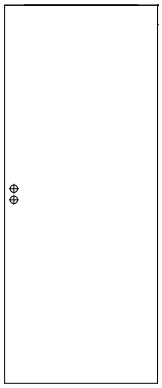

Painted, compact form pressed door

General information	
Product name	optFINLAND 3SYM KOMPAKT painted
Class	unclassified
Door thickness size	40mm
Sound transmittance	36dB
Weight (M21x9)	Door leaf - 42kg Frame SWE 92mm - 7kg
Glass	-
Decoration	1 layer - primer, 1 layer - UV paint
Standart color	NCS S0502-Y, gloss 25, eco-friendly, water based
Standard fittings	Lock: 2014; hinges: 6540KS 2 pcs;
Frames	SWE, SWE-NOR, SWE-FLEX, SWE-NOR-FLEX, SMP
Thresholds	E oak, B oak, BB oak, SMP
Non-standard size production	Available at master plus
Decoration according NCS / RAL	Available at optimal plus (NCS S0500-N, NCS S7500-N, NCS S8500-N)
Other glazing options	-
Other lock case and hinges options	Available at master plus
Units per pallet	20 pcs. A pallet consist one model and one size product
Product quality warranty	3 years

Size standard production	M21	M20.5	M20	M19
M4	-	-	-	-
M5	-	-	-	-
M7	+	+	+	+
M8	+	+	+	+
M9	+	+	+	+
M10	-	-	-	-

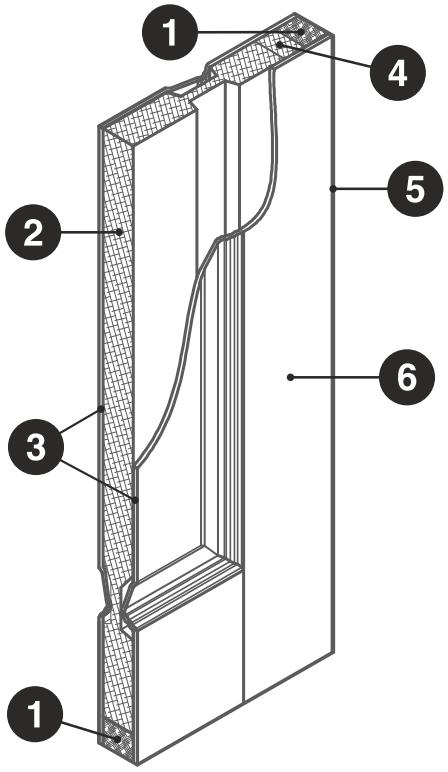

Profile structure

1. Medium density fiberboard (MDF)
2. Chipboard core
3. High density fiberboard (HDF)
4. Medium density particleboard (MDP)
5. Melamine edgeband
6. Painted surface

Available designs

optFINLAND 3SYM

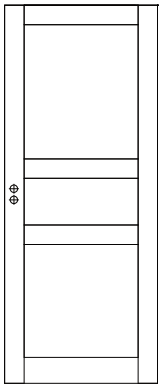

Frames for interior doors

General information	
Product name	optSWE 92, optSWE-NOR 92, optSMP 100, optSMP 130
Class	unclassified
Sound transmittance	-
Weight(M21x9)	Frame SWE 92mm - 7kg
Construction	Finger jointed wood (see construction drawings for more detailed information)
Decoration	2 layers - primer, 1 layer - UV paint
Standart color	NCS S0502-Y, gloss 25, eco-friendly, water based
Standart fittings	Hinges: 6540KS (Frame part) 2 pcs. Lock plate: 0045.
Thresholds	E 92 oak, B 92 oak, BB 92 oak, SMP 100, SMP 130
Non-standart size production	Available at master plus
Decoration according NCS / RAL	Available at optimal plus (NCS S0500-N)
Other glazing options	-
Product quality warranty	3 years

Size standard production	M21	M20.5	M20	M19
M4	-	-	-	-
M5	-	-	-	-
M7	+	+	+	+
M8	+	+	+	+
M9	+	+	+	+
M10	+	+	+	+
M11	+	+	+	+
M12	+	+	+	+
M13	+	+	+	+
M14	+	+	+	+
M13.1	+	+	+	+
M15	+	+	+	+
M17	+	+	+	+
M19	+	+	+	+

optSWE-92 frame

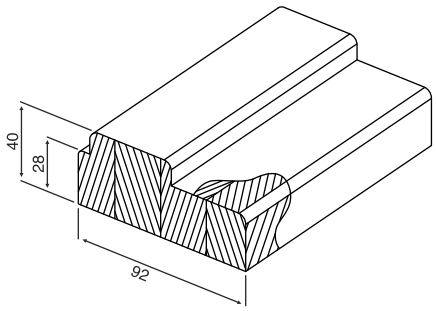

optSWE-NOR-92 frame

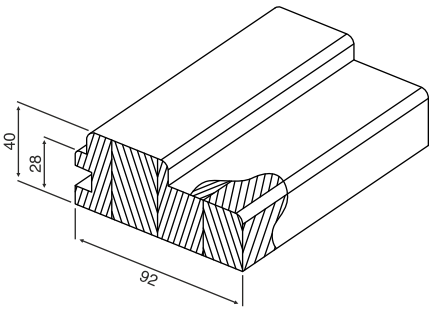

optSMP-100/130 frame

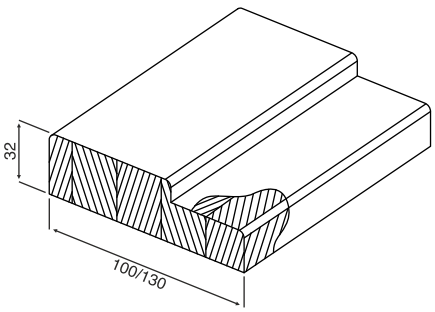

optSWE 92, optSWE-NOR 92 frame - top

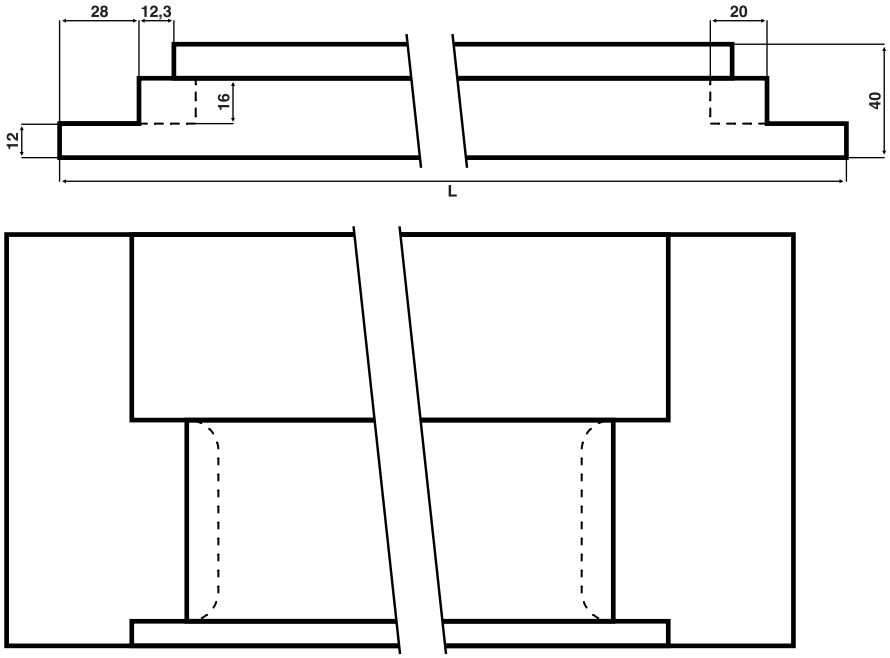

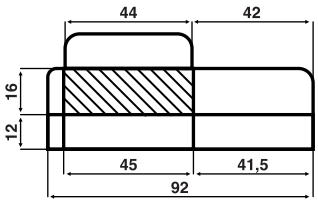

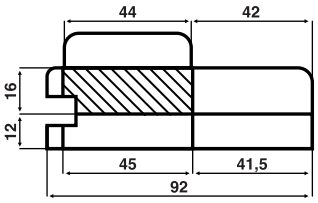

	M7	M8	M9	M10	M11	M12	M13	M14	M13.1	M15	M17	M19
Door leaf width	625	725	825	925	625+398	725+398	825+398	925+398	625+625	725+725	825+825	925+925
L - SWE top length	687	787	887	987	1092	1192	1292	1392	1319	1519	1719	1919

optSWE 92, optSWE-NOR 92 frame - sides

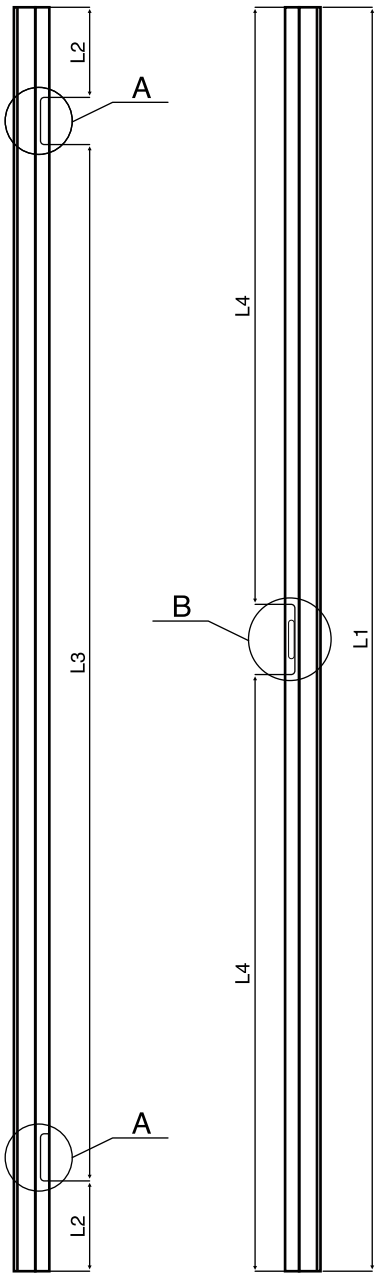

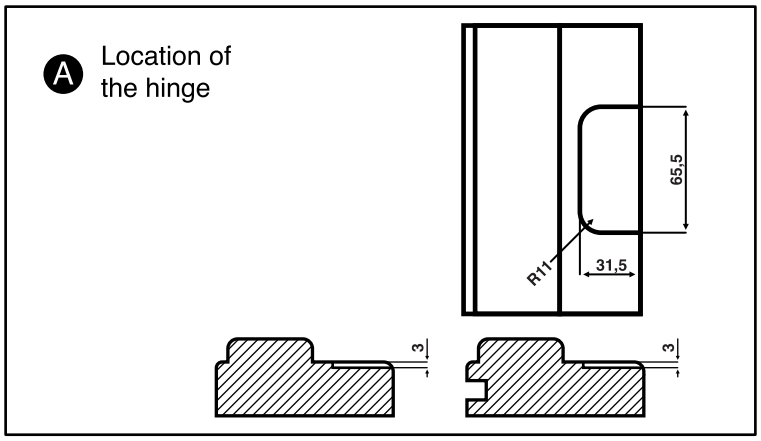

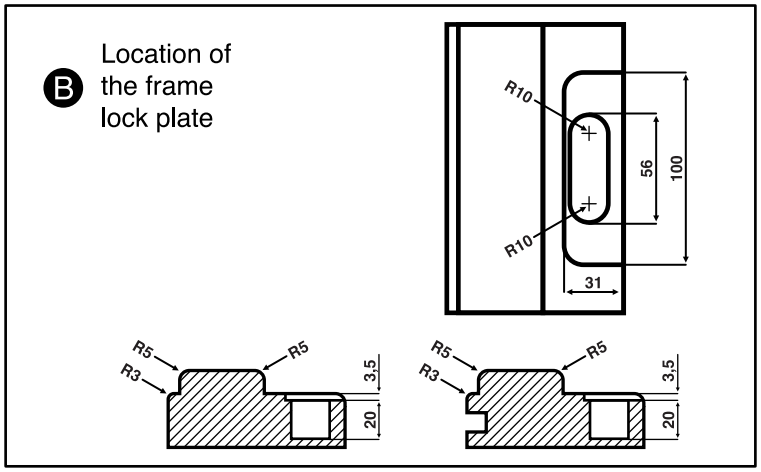

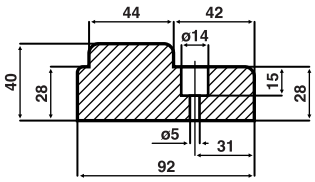

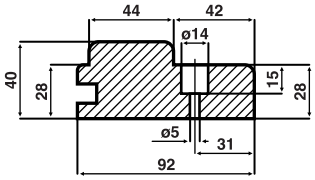

	L1	L2	L3	L4
	Frame side length	Distance to the hinges	Distance between hinges	Distance to the frame lock plate
M19	1877	136	1540	888.5
M20	1977	186	1540	938.5
M20.5	2037	216	1540	968.5
M21	2077	236	1540	988.5

optSMP 100/130 frame - top

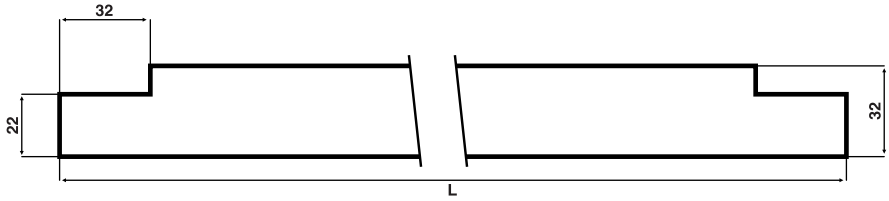

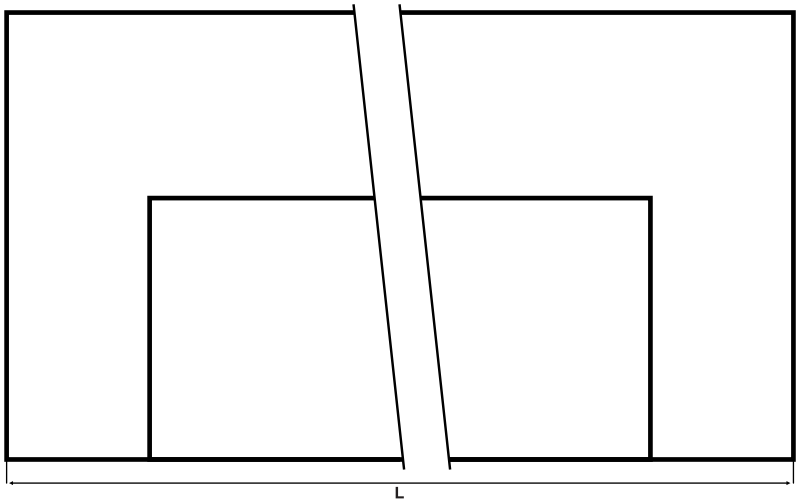

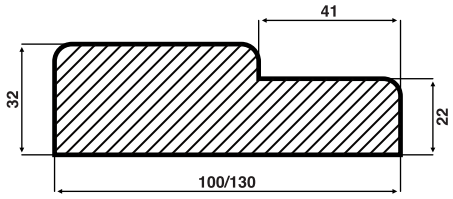

	M7	M8	M9	M10	M15
Door leaf width	625	725	825	925	725+725
L - SWE top length	675	775	875	975	1503

optSMP 100/130 frame - sides

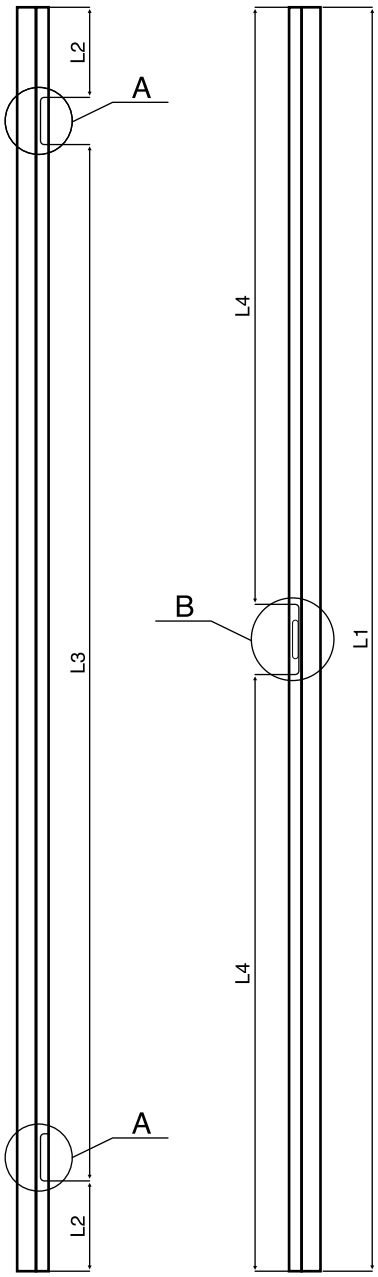

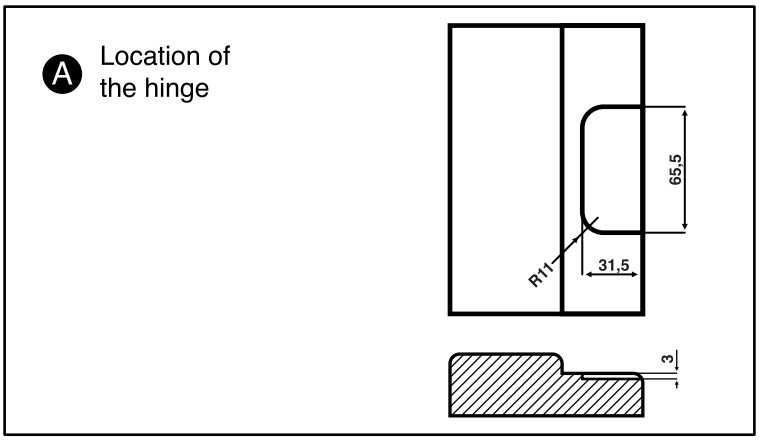

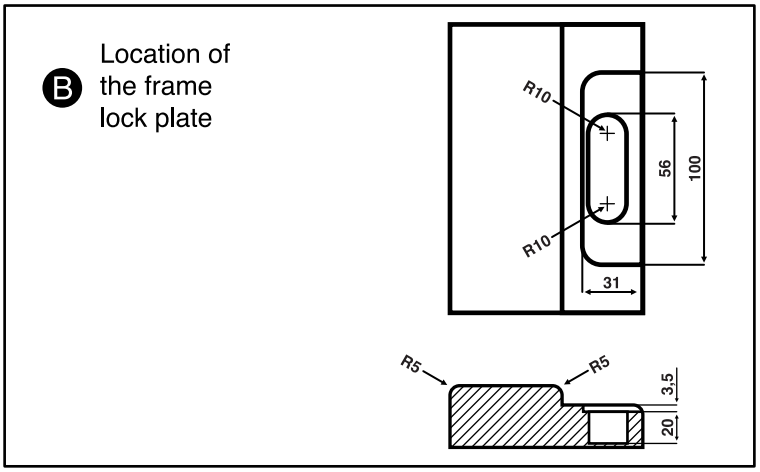

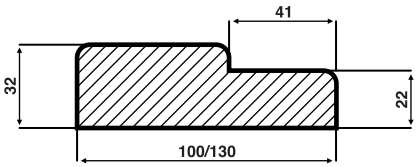

	L1	L2	L3	L4
	Frame side length	Distance to the hinges	Distance between hinges	Distance to the frame lock plate
M19	1848	121,5	1540	874
M20	1948	171,5	1540	924
M21	2048	221,5	1540	974

Thresholds for interior doors

General information	
Product name	E 92 mm , B 92 mm, BB 92 mm
Class	unclassified
Sound transmittance	-
Weight (M9)	~1kg
Construction	Finger joointed oak wood (see construction drawings for more detailed information).
Decoration	Transparent lacquering, 2 layers of lacquer
Standart fittings	-
Frame	optSWE 92, optSWE-NOR 92 and all profiles, sizes and models of frames from Master category
Non-standart size production	Available at master plus
Decoration according NCS / RAL	-
Other glazing options	Can be oiled
Units per pallet	35 pcs. A pallet consist one model and one size; for M10 and M11-19 size of thresholds, a pallet can consist different sizes, but not less than 5 of one size product
Product quality warranty	5 years

Size standard production	M21	M20.5	M20	M19
M4	-	-	-	-
M5	-	-	-	-
M7	+	+	+	+
M8	+	+	+	+
M9	+	+	+	+
M10	+	+	+	+
M11	+	+	+	+
M12	+	+	+	+
M13	+	+	+	+
M14	+	+	+	+
M13.1	+	+	+	+
M15	+	+	+	+
M17	+	+	+	+
M19	+	+	+	+

E 92 mm threshold

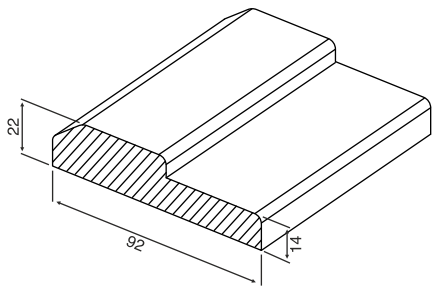

B 92 mm threshold

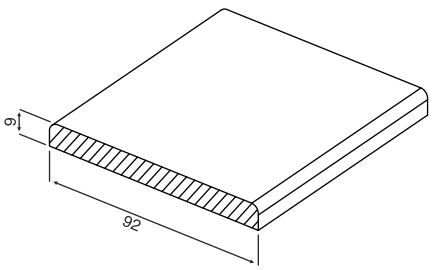

BB 92 mm threshold

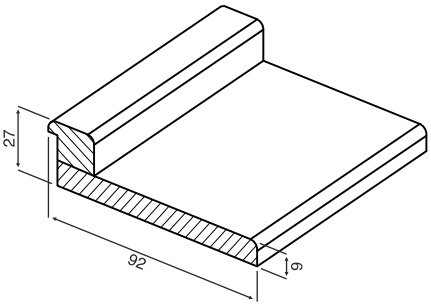

Thresholds for SWE, SWE-NOR, SWE-FLEX, SWE-NOR-FLEX frame

Profile E

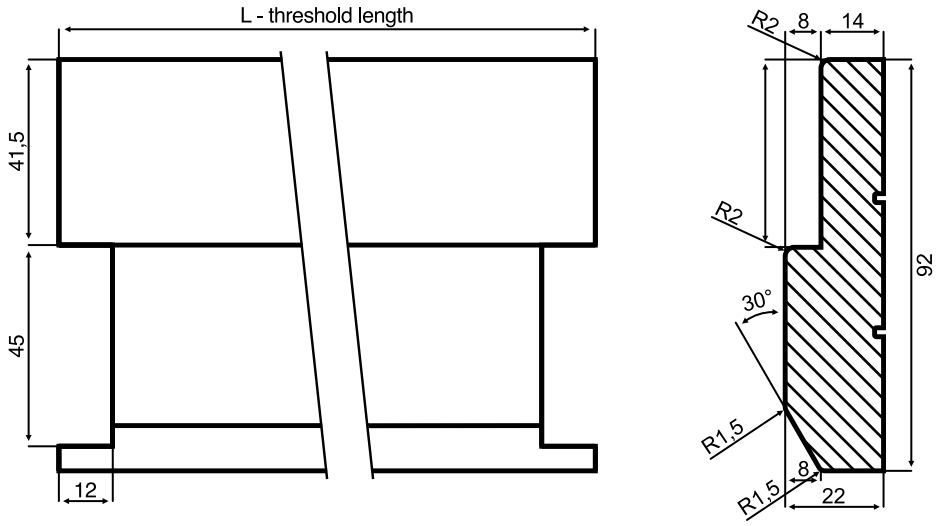

Profile Plate - B

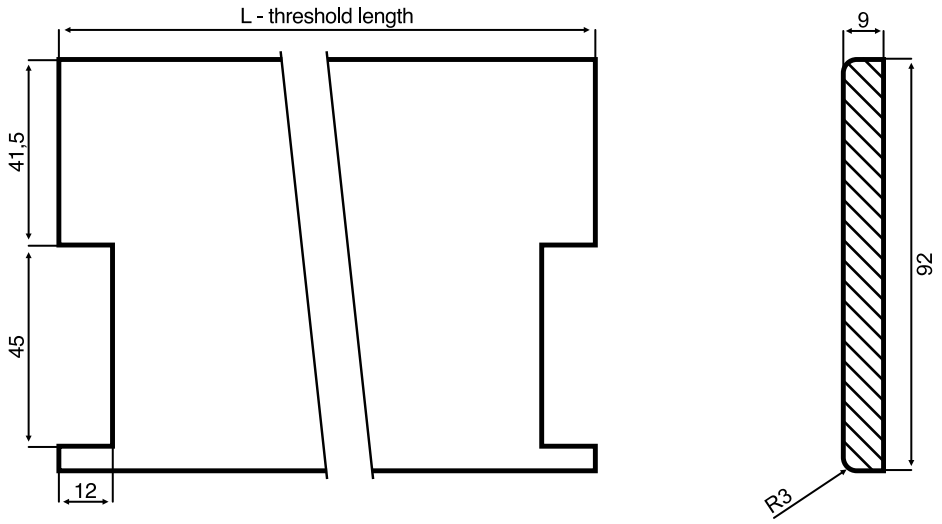

Profile Bathr. - BB

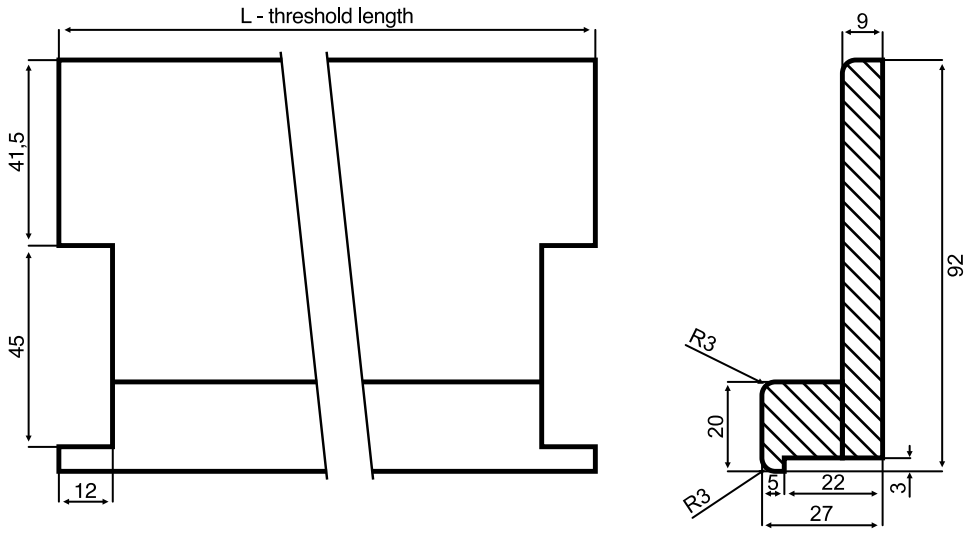

	M7	M8	M9	M10	M11	M12	M13	M14	M13.1	M15	M17	M19
Door leaf width	625	725	825	925	625+398	725+398	825+398	925+398	625+625	725+725	825+825	925+925
L - threshold length	631	731	831	931	1036	1136	1236	1336	1263	1463	1663	1863

Painted, massive framed door, CLASSIC profile

General information	
Product name	mstrFINLAND painted, mstrNORGE painted, mstrDANNEBROG painted, mstrSWEDISH painted, mstrFINLAND DS1, mstrFINLAND DS2, mstrFINLAND DS3
Class	unclassified
Door thickness size	40mm
Sound transmittance	28dB
Weight (M21x9)	Door leaf - 24kg Frame SWE 92mm - 7kg
Glass	-
Decoration	2 layer - primer, 1 layer - UV paint (Extra UV paint layer for intensive dark colors)
Standart color	NCS S0502-Y, gloss 25, eco-friendly, water based
Standard fittings	Lock case: 2014; hinges: 6540KS 2 pcs;
Frames	SWE, SWE-NOR, SWE-FLEX, SWE-NOR-FLEX, SMP
Thresholds	E oak, B oak, BB oak, SMP
Non-standard size production	Available
Decoration according NCS / RAL	Any NCS or RAL color
Other coating options	Extra bathroom coating layer for bathroom doors
Other glazing options	-
Other lock case and hinges options	Lock case: AGB, 2018, Hinges: D-SIGN hidden hinges
Units per pallet	A pallet can consist different models, sizes and quantities according to PO number
Product quality warranty	5 years

Master plus production				
Door thickness size	Available 35mm thickness			
Min/max size	Min width	Max width	Min height	Max height
mm	160	925	160	2440
M size	2.35	10	2.35	25

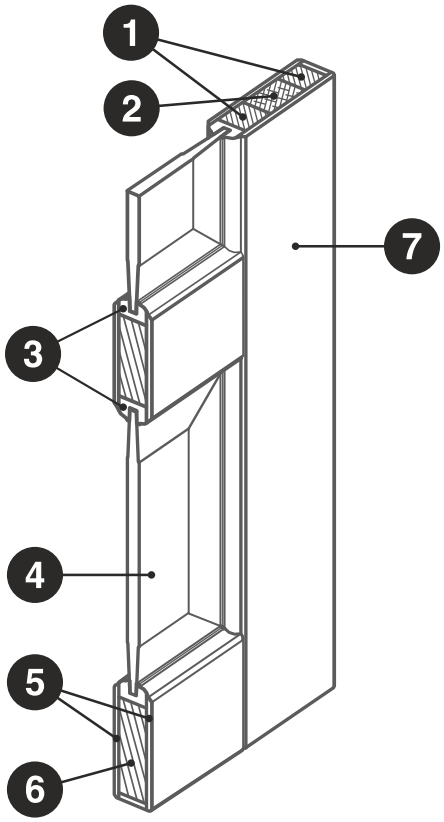

Profile structure

1. Wood
2. Medium density particle (MDP)
3. Medium density fiberboard (MDF)
4. Medium density fiberboard (MDF) panel
5. High density fiberboard (HDF)
6. Wood
7. Painted surface

Available designs

mstrFINLAND

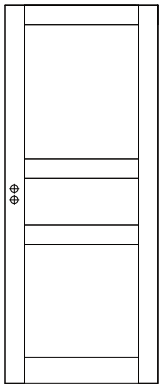

mstrNORGE

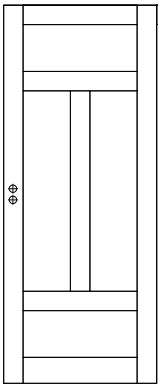

mstrDANNEBROG

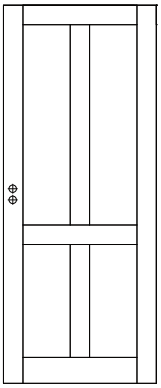

mstrSWEDISH

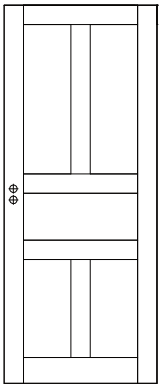

mstrFINLAND DS1

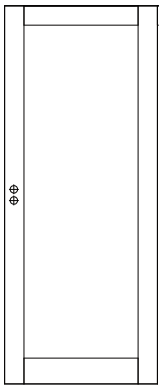

mstrFINLAND DS2

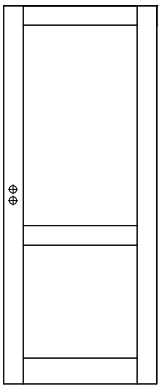

mstrFINLAND DS3

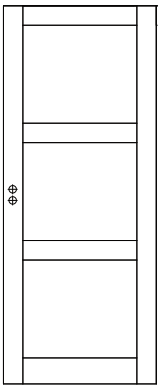

Painted, massive framed door, CLASSIC glass profile

General information	
Product name	mstrFINLAND 6SP glass painted, mstrNORGE 10SP glass painted, mstrISLAND 12SP glass painted
Class	unclassified
Door thickness size	40mm
Sound transmittance	28dB
Weight (M21x9)	Door leaf - 22kg Frame SWE 92mm - 7kg
Glass	Glass are intergrated into construction All glass doors in a stock program are supplied with transparent glass All glass are shatterproof
Decoration	2 layers - primer, 1 layer - UV paint (Extra UV paint layer for intensive dark colors)
Standart color	NCS S0502-Y, gloss 25, eco-friendly, water based
Standard fittings	Lock case: 2014; hinges: 6540KS 2 pcs;
Frames	SWE, SWE-NOR, SWE-FLEX, SWE-NOR-FLEX, SMP
Thresholds	E oak, B oak, BB oak, SMP
Non-standard size production	Available
Decoration according NCS / RAL	Any NCS or RAL color
Other coating options	Extra bathroom coating layer for bathroom doors
Other glazing options	Matt, facet
Other lock case and hinges options	Lock case: AGB, 2018, Hinges: D-SIGN hidden hinges
Units per pallet	A pallet can consist different models, sizes and quantities according to PO number
Product quality warranty	5 years

Master plus production				
Door thickness size	Available 35mm thickness			
Min/max size	Min width	Max width	Min height	Max height
mm	160	925	160	2440
M size	2.35	10	2.35	25

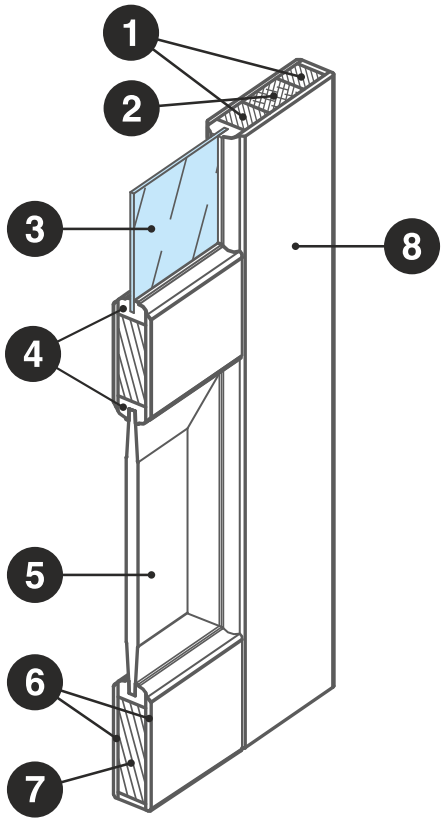

Profile structure

1. Wood
2. Medium density particle (MDP)
3. Glass
4. Medium density fiberboard (MDF)
5. Medium density fiberboard (MDF) panel
6. High density fiberboard (HDF)
7. Wood
8. Painted surface

Available designs

mstrFINLAND 6SP

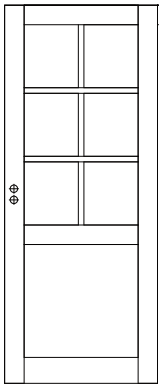

mstrFINLAND 6SP

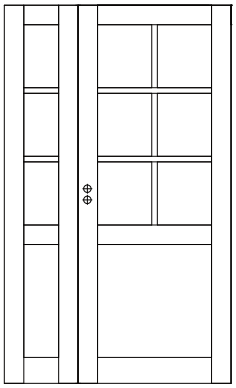

mstrFINLAND 6SP

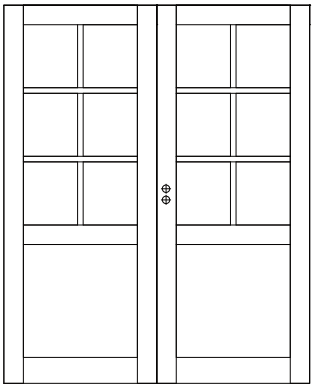

mstrNORGE 10SP

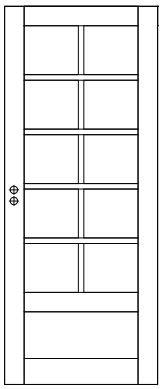

mstrNORGE 10SP

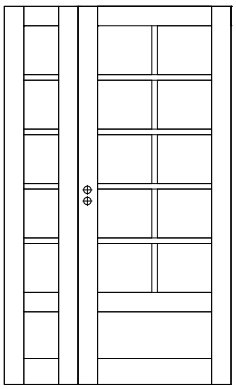

mstrNORGE 10SP

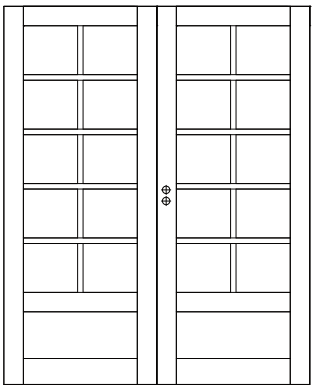

mstrISLAND 12SP

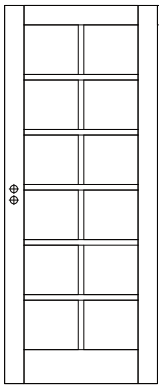

mstrISLAND 12SP

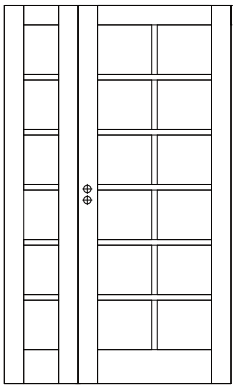

mstrISLAND 12SP

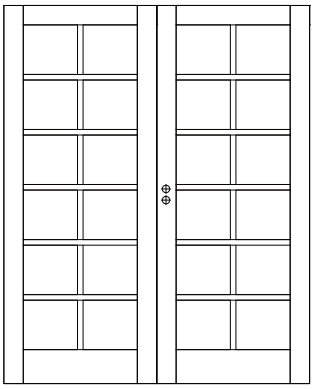

Painted, massive framed door, CLASSIC DS-TR profile

General information	
Product name	mstrFINLAND DS1-TR painted, mstrFINLAND DS3-TR painted
Class	unclassified
Door thickness size	40mm
Sound transmittance	28dB
Weight (M21x9)	Door leaf - 24kg Frame SWE 92mm - 7kg
Glass	-
Decoration	2 layer - primer, 1 layer - UV paint (Extra UV paint layer for intensive dark colors)
Standart color	NCS S0502-Y, gloss 25, eco-friendly, water based
Standard fittings	Lock case: 2014; hinges: 6540KS 2 pcs;
Frames	SWE, SWE-NOR, SWE-FLEX, SWE-NOR-FLEX, SMP
Thresholds	E oak, B oak, BB oak, SMP
Non-standard size production	Available
Decoration according NCS / RAL	Any NCS or RAL color
Other coating options	Extra bathroom coating layer for bathroom doors
Other glazing options	-
Other lock case and hinges options	Lock case: AGB, 2018, Hinges: D-SIGN hidden hinges
Units per pallet	A pallet can consist different models, sizes and quantities according to PO number
Product quality warranty	5 years

Master plus production				
Door thickness size	Available 35mm thickness			
Min/max size	Min width	Max width	Min height	Max height
mm	160	925	160	2440
M size	2.35	10	2.35	25

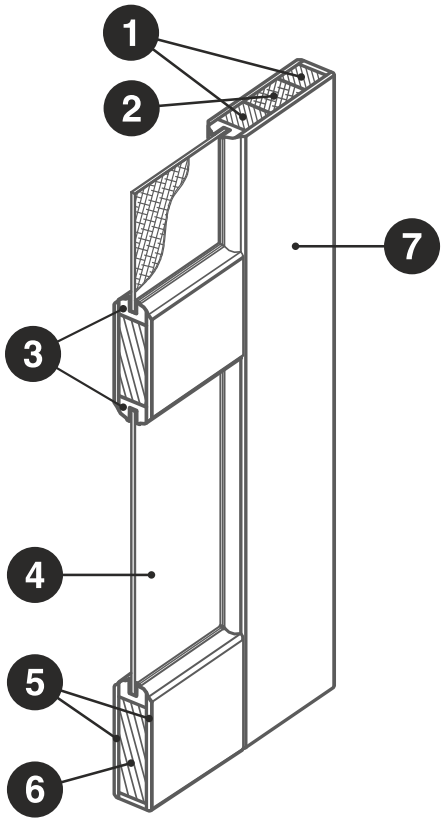

Profile structure

1. Wood
2. Medium density particle (MDP)
3. Medium density fiberboard (MDF)
4. Medium density fiberboard (MDF) panel
5. High density fiberboard (HDF)
6. Wood
7. Painted surface

Available designs

mstrFINLAND DS1-TR

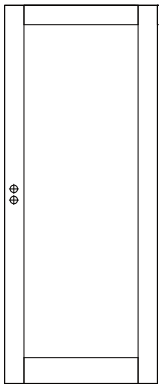

mstrFINLAND DS3-TR

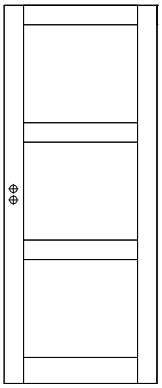

Painted, massive framed door, TREND100 profile

General information	
Product name	mstrTREND100-1 painted, mstrTREND100-3 painted
Class	unclassified
Door thickness size	40mm
Sound transmittance	28dB
Weight (M21x9)	Door leaf - 20kg Frame SWE 92mm - 7kg
Glass	-
Decoration	2 layer - primer, 1 layer - UV paint (Extra UV paint layer for intensive dark colors)
Standart color	NCS S0502-Y, gloss 25, eco-friendly, water based
Standard fittings	Lock case: 2014; hinges: 6540KS 2 pcs;
Frames	SWE, SWE-NOR, SWE-FLEX, SWE-NOR-FLEX, SMP
Thresholds	E oak, B oak, BB oak, SMP
Non-standard size production	Available
Decoration according NCS / RAL	Any NCS or RAL color
Other coating options	Extra bathroom coating layer for bathroom doors
Other glazing options	-
Other lock case and hinges options	Lock case: AGB, 2018, Hinges: D-SIGN hidden hinges
Units per pallet	A pallet can consist different models, sizes and quantities according to PO number
Product quality warranty	5 years

Master plus production				
Door thickness size	Available 35mm thickness			
Min/max size	Min width	Max width	Min height	Max height
mm	160	925	160	2440
M size	2.35	10	2.35	25

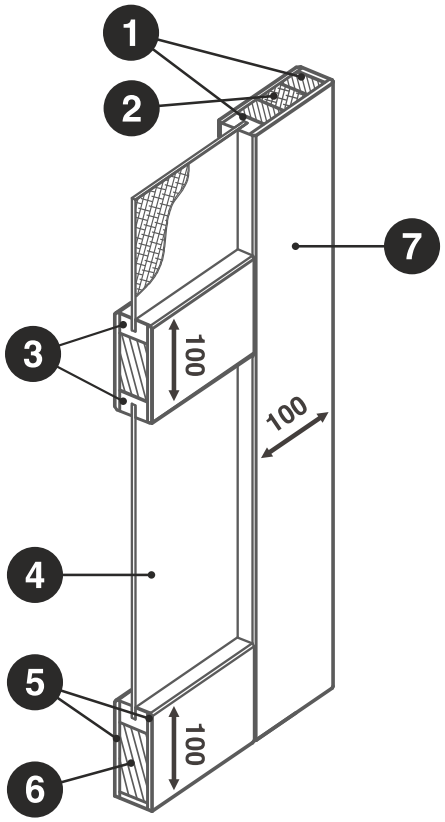

Profile structure

1. Wood
2. Medium density particle (MDP)
3. Medium density fiberboard (MDF)
4. Medium density fiberboard (MDF) panel
5. High density fiberboard (HDF)
6. Wood
7. Painted surface

Available designs

mstrTREND100-1

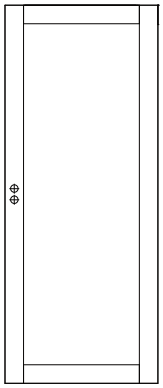

mstrTREND100-3

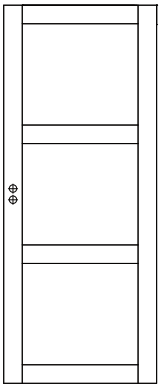

Painted, massive framed door, TREND100 glass profile

General information	
Product name	mstrTREND100-1SP glass painted, mstTREND100-3SP glass painted, mstrTREND100-4SP glass painted
Class	unclassified
Door thickness size	40mm
Sound transmittance	28dB
Weight (M21x9)	Door leaf - 18kg Frame SWE 92mm - 7kg
Glass	Glass are intergrated into construction All glass doors in a stock program are supplied with transparent glass All glass are shatterproof
Decoration	2 layer - primer, 1 layer - UV paint (Extra UV paint layer for intensive dark colors)
Standart color	NCS S0502-Y, gloss 25, eco-friendly, water based
Standard fittings	Lock case: 2014; hinges: 6540KS 2 pcs;
Frames	SWE, SWE-NOR, SWE-FLEX, SWE-NOR-FLEX, SMP
Thresholds	E oak, B oak, BB oak, SMP
Non-standard size production	Available
Decoration according NCS / RAL	Any NCS or RAL color
Other coating options	Extra bathroom coating layer for bathroom doors
Other glazing options	Matt, facet
Other lock case and hinges options	Lock case: AGB, 2018, Hinges: D-SIGN hidden hinges
Units per pallet	A pallet can consist different models, sizes and quantities according to PO number
Product quality warranty	5 years

Master plus production				
Door thickness size	Available 35mm thickness			
Min/max size	Min width	Max width	Min height	Max height
mm	160	925	160	2440
M size	2.35	10	2.35	25

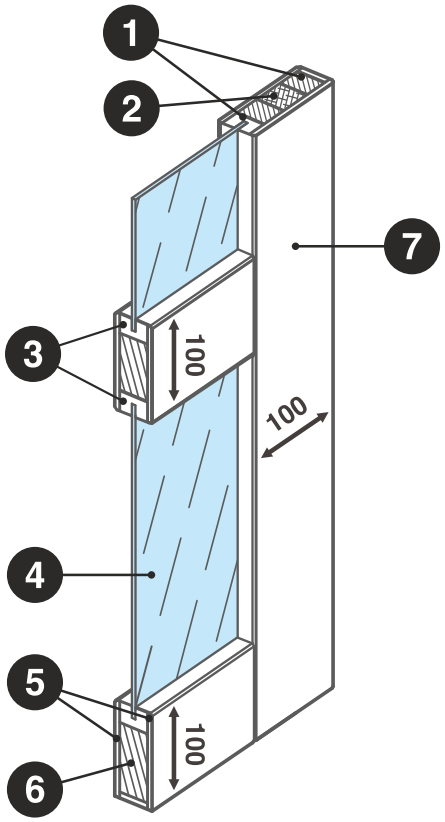

Profile structure

1. Wood
2. Medium density particle (MDP)
3. Medium density fiberboard (MDF)
4. Glass
5. High density fiberboard (HDF)
6. Wood
7. Painted surface

Available designs

mstrTREND100-1SP

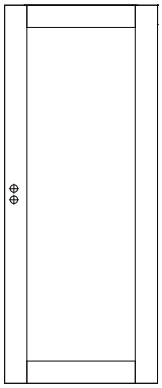

mstrTREND100-1SP

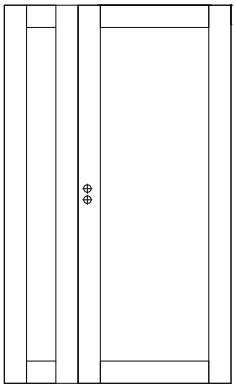

mstrTREND100-1SP

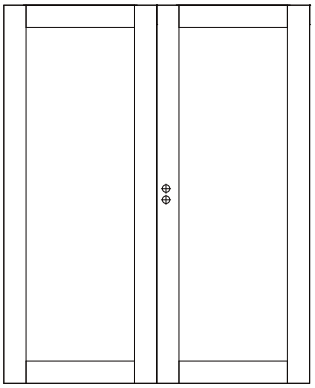

mstrTREND100-3SP

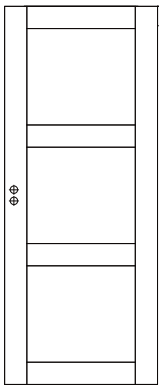

mstrTREND100-3SP

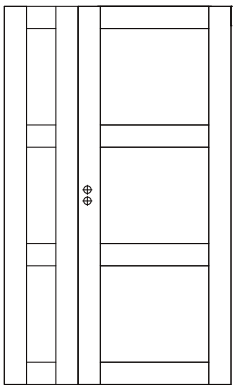

mstrTREND100-3SP

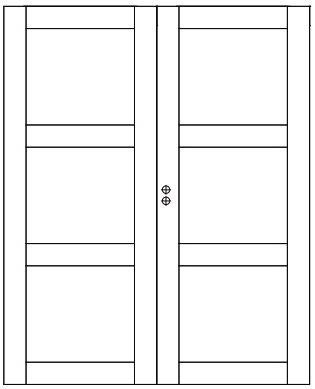

mstrTREND100-4SP

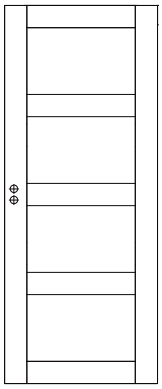

mstrTREND100-4SP

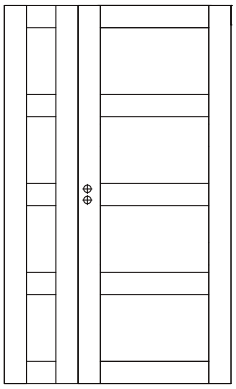

mstrTREND100-4SP

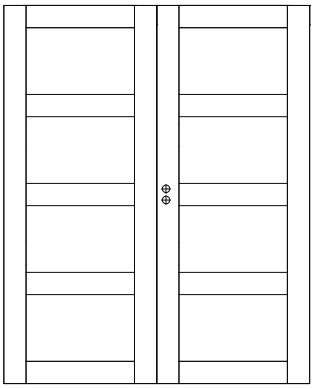

Painted, massive framed door, TREND105 profile

General information	
Product name	mstrTREND105-1 painted, mstrTREND105-3 painted, mstrTREND105-4 painted
Class	unclassified
Door thickness size	40mm
Sound transmittance	28dB
Weight (M21x9)	Door leaf - 22kg Frame SWE 92mm - 7kg
Glass	-
Decoration	2 layers - primer, 1 layer - UV paint (Extra UV paint layer for intensive dark colors)
Standart color	NCS S0502-Y, gloss 25, eco-friendly, water based
Standard fittings	Lock case: 2014; hinges: 6540KS 2 pcs;
Frames	SWE, SWE-NOR, SWE-FLEX, SWE-NOR-FLEX, SMP
Thresholds	E oak, B oak, BB oak, SMP
Non-standard size production	Available
Decoration according NCS / RAL	Any NCS or RAL color
Other coating options	Extra bathroom coating layer for bathroom doors
Other glazing options	-
Other lock case and hinges options	Lock case: AGB, 2018, Hinges: D-SIGN hidden hinges
Units per pallet	A pallet can consist different models, sizes and quantities according to PO number
Product quality warranty	5 years

Master plus production				
Door thickness size	Available 35mm thickness			
Min/max size	Min width	Max width	Min height	Max height
mm	160	925	160	2440
M size	2.35	10	2.35	25

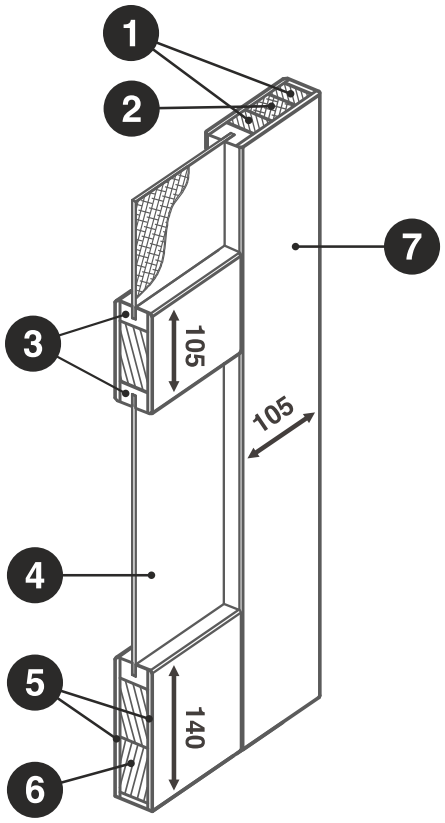

Profile structure

1. Wood
2. Medium density particle (MDP)
3. Medium density fiberboard (MDF)
4. Medium density fiberboard (MDF) panel
5. High density fiberboard (HDF)
6. Wood
7. Painted surface

Available designs

mstrTREND105-1

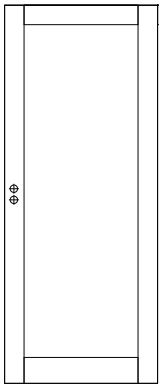

mstrTREND105-3

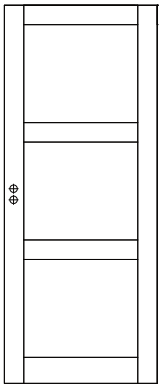

mstrTREND105-4

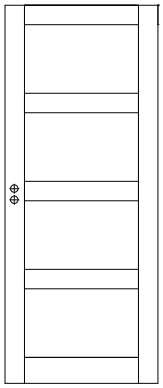

Painted, massive framed door, TREND105 glass profile

General information	
Product name	mstrTREND105-1SP glass painted, mstrTREND105-3SP glass painted, mstrTREND105-4SP glass painted
Class	unclassified
Door thickness size	40mm
Sound transmittance	28dB
Weight (M21x9)	Door leaf - 21kg Frame SWE 92mm - 7kg
Glass	Glass are intergrated into construction All glass doors in a stock program are supplied with transparent glass All glass are shatterproof
Decoration	2 layer - primer, 1 layer - UV paint (Extra UV paint layer for intensive dark colors)
Standart color	NCS S0502-Y, gloss 25, eco-friendly, water based
Standard fittings	Lock case: 2014; hinges: 6540KS 2 pcs;
Frames	SWE, SWE-NOR, SWE-FLEX, SWE-NOR-FLEX, SMP
Thresholds	E oak, B oak, BB oak, SMP
Non-standard size production	Available
Decoration according NCS / RAL	Any NCS or RAL color
Other coating options	Extra bathroom coating layer for bathroom doors
Other glazing options	Matt, facet
Other lock case and hinges options	Lock case: AGB, 2018, Hinges: D-SIGN hidden hinges
Units per pallet	A pallet can consist different models, sizes and quantities according to PO number
Product quality warranty	5 years

Master plus production				
Door thickness size	Available 35mm thickness			
Min/max size	Min width	Max width	Min height	Max height
mm	160	925	160	2440
M size	2.35	10	2.35	25

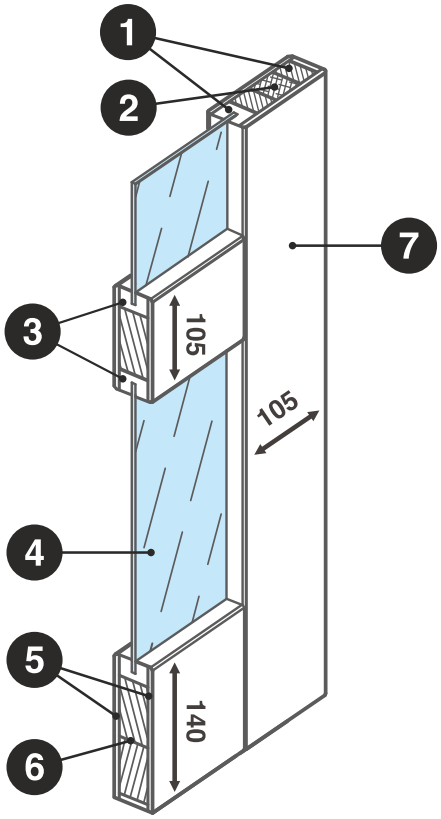

Profile structure

1. Wood
2. Medium density particle (MDP)
3. Medium density fiberboard (MDF)
4. Glass
5. High density fiberboard (HDF)
6. Wood
7. Painted surface

Available designs

mstrTREND105-1SP

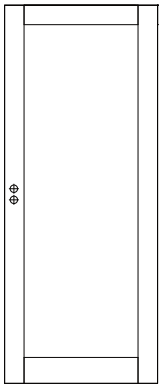

mstrTREND105-1SP

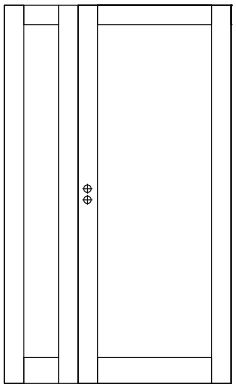

mstrTREND105-1SP

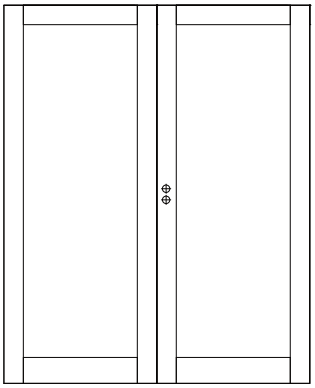

mstrTREND105-3SP

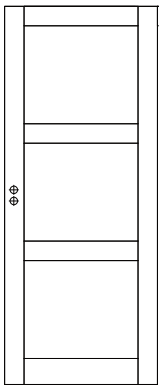

mstrTREND105-3SP

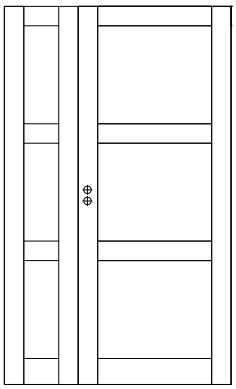

mstrTREND105-3SP

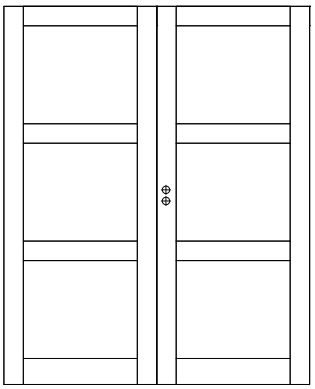

mstrTREND105-4SP

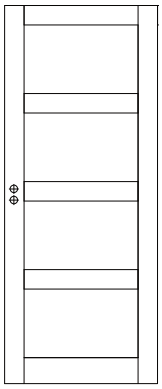

mstrTREND105-4SP

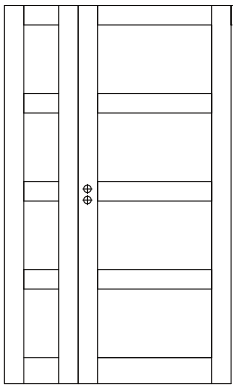

mstrTREND105-4SP

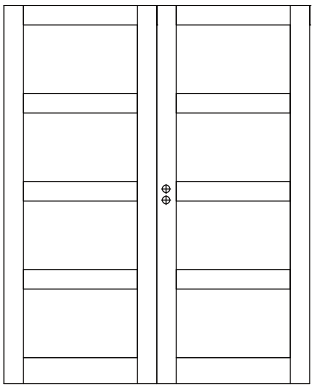

Painted, massive framed door, TREND120 profile

General information	
Product name	mstrTREND120-1 painted, mstrTREND120-3 painted, mstrTREND120-4 painted
Class	unclassified
Door thickness size	40mm
Sound transmittance	28dB
Weight (M21x9)	Door leaf - 23kg Frame SWE 92mm - 7kg
Glass	-
Decoration	2 layer - primer, 1 layer - UV paint (Extra UV paint layer for intensive dark colors)
Standart color	NCS S0502-Y, gloss 25, eco-friendly, water based
Standard fittings	Lock case: 2014; hinges: 6540KS 2 pcs;
Frames	SWE, SWE-NOR, SWE-FLEX, SWE-NOR-FLEX, SMP
Thresholds	E oak, B oak, BB oak, SMP
Non-standard size production	Available
Decoration according NCS / RAL	Any NCS or RAL color
Other coating options	Extra bathroom coating layer for bathroom doors
Other glazing options	-
Other lock case and hinges options	Lock case: AGB, 2018, Hinges: D-SIGN hidden hinges
Units per pallet	A pallet can consist different models, sizes and quantities according to PO number
Product quality warranty	5 years

Master plus production				
Door thickness size	Available 35mm thickness			
Min/max size	Min width	Max width	Min height	Max height
mm	160	925	160	2440
M size	2.35	10	2.35	25

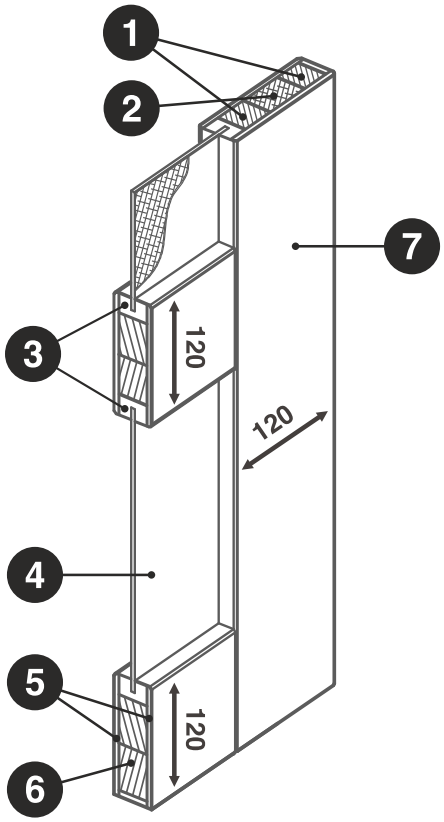

Profile structure

1. Wood
2. Medium density particle (MDP)
3. Medium density fiberboard (MDF)
4. Medium density fiberboard (MDF) panel
5. High density fiberboard (HDF)
6. Wood
7. Painted surface

Available designs

mstrTREND120-1

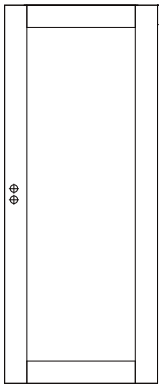

mstrTREND120-3

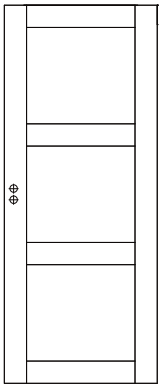

mstrTREND120-4

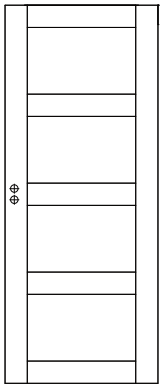

Painted, massive framed door, TREND120 glass profile

General information	
Product name	mstrTREND120-1SP glass painted, mstrTREND120-3SP glass painted, mstrTREND120-4SP glass painted
Class	unclassified
Door thickness size	40mm
Sound transmittance	28dB
Weight (M21x9)	Door leaf - 22kg Frame SWE 92mm - 7kg
Glass	Glass are intergrated into construction All glass doors in a stock program are supplied with transparent glass All glass are shatterproof
Decoration	2 layer - primer, 1 layer - UV paint (Extra UV paint layer for intensive dark colors)
Standart color	NCS S0502-Y, gloss 25, eco-friendly, water based
Standard fittings	Lock case: 2014; hinges: 6540KS 2 pcs;
Frames	SWE, SWE-NOR, SWE-FLEX, SWE-NOR-FLEX, SMP
Thresholds	E oak, B oak, BB oak, SMP
Non-standard size production	Available
Decoration according NCS / RAL	Any NCS or RAL color
Other coating options	Extra bathroom coating layer for bathroom doors
Other glazing options	Matt, facet
Other lock case and hinges options	Lock case: AGB, 2018, Hinges: D-SIGN hidden hinges
Units per pallet	A pallet can consist different models, sizes and quantities according to PO number
Product quality warranty	5 years

Master plus production				
Door thickness size	Available 35mm thickness			
Min/max size	Min width	Max width	Min height	Max height
mm	160	925	160	2440
M size	2.35	10	2.35	25

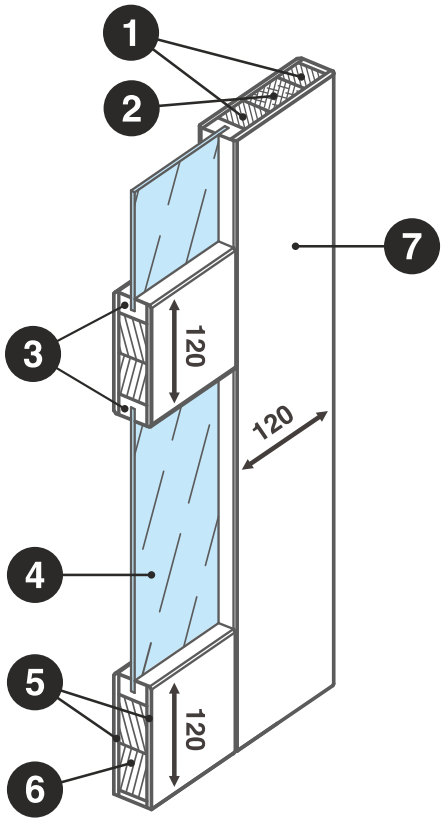

Profile structure

1. Wood
2. Medium density particle (MDP)
3. Medium density fiberboard (MDF)
4. Glass
5. High density fiberboard (HDF)
6. Wood
7. Painted surface

Available designs

mstrTREND120-1SP

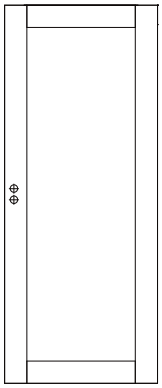

mstrTREND120-1SP

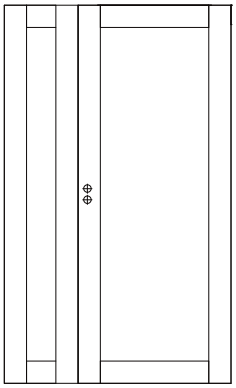

mstrTREND120-1SP

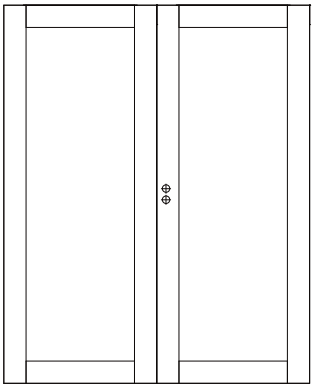

mstrTREND120-3SP

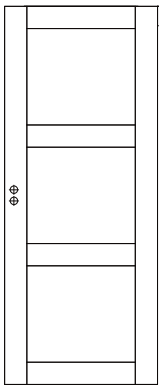

mstrTREND120-3SP

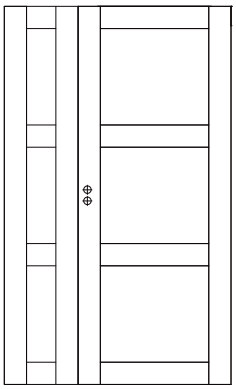

mstrTREND120-3SP

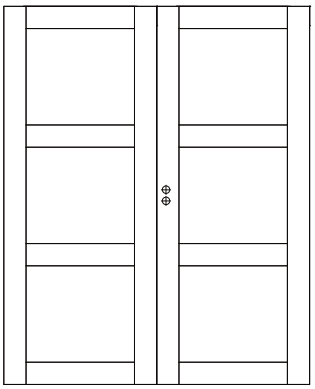

mstrTREND120-4SP

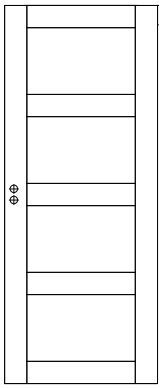

mstrTREND120-4SP

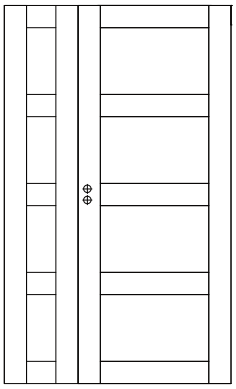

mstrTREND120-4SP

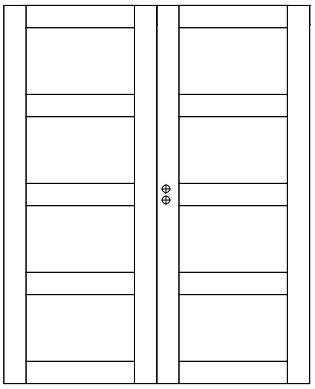

Painted, massive framed door, TREND-CLASSIC DESIGN profile

General information	
Product name	mstrTREND DS1-CL painted, mstrTREND DS3-CL painted
Class	unclassified
Door thickness size	40mm
Sound transmittance	28dB
Weight (M21x9)	Door leaf - 26kg Frame SWE 92mm - 7kg
Glass	-
Decoration	2 layers - primer, 1 layer - UV paint (Extra UV paint layer for intensive dark colors)
Standart color	NCS S0502-Y, gloss 25, eco-friendly, water based
Standard fittings	Lock case: 2014; hinges: 6540KS 2 pcs;
Frames	SWE, SWE-NOR, SWE-FLEX, SWE-NOR-FLEX, SMP
Thresholds	E oak, B oak, BB oak, SMP
Non-standard size production	Available
Decoration according NCS / RAL	Any NCS or RAL color
Other coating options	Extra bathroom coating layer for bathroom doors
Other glazing options	-
Other lock case and hinges options	Lock case: AGB, 2018, Hinges: D-SIGN hidden hinges
Units per pallet	A pallet can consist different models, sizes and quantities according to PO number
Product quality warranty	5 years

Master plus production				
Door thickness size	Available 35mm thickness			
Min/max size	Min width	Max width	Min height	Max height
mm	160	925	160	2440
M size	2.35	10	2.35	25

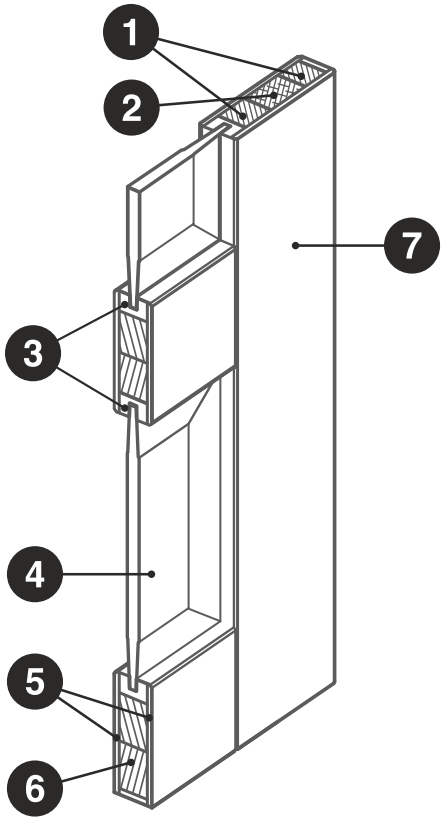

Profile structure

1. Wood
2. Medium density particle (MDP)
3. Medium density fiberboard (MDF)
4. Medium density fiberboard (MDF) panel
5. High density fiberboard (HDF)
6. Wood
7. Painted surface

Available designs

mstrTREND DS1-CL

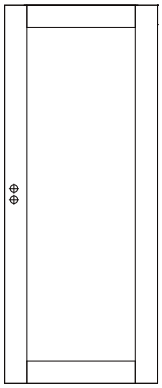

mstrTREND DS3-CL

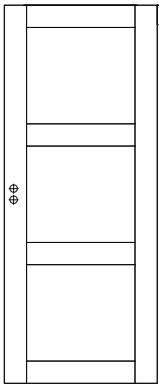

Painted, massive framed door, TREND DESIGN-RNG glass profile

General information	
Product name	mstrTREND DS1-RNG1 painted, mstrTREND DS1-RNG3 painted, mstrTREND DS3-RNG1 painted, mstrTREND DS3-RNG3 painted
Class	unclassified
Door thickness size	40mm
Sound transmittance	28dB
Weight (M21x9)	Door leaf - 24kg Frame SWE 92mm - 7kg
Glass	Glass are intergrated into construction All glass doors in a stock program are supplied with transparent glass All glass are shatterproof
Decoration	2 layer - primer, 1 layer - UV paint (Extra UV paint layer for intensive dark colors)
Standart color	NCS S0502-Y, gloss 25, eco-friendly, water based
Standard fittings	Lock case: 2014; hinges: 6540KS 2 pcs;
Frames	SWE, SWE-NOR, SWE-FLEX, SWE-NOR-FLEX, SMP
Thresholds	E oak, B oak, BB oak, SMP
Non-standard size production	Available
Decoration according NCS / RAL	Any NCS or RAL color
Other coating options	Extra bathroom coating layer for bathroom doors
Other glazing options	Matt, facet
Other lock case and hinges options	Lock case: AGB, 2018, Hinges: D-SIGN hidden hinges
Units per pallet	A pallet can consist different models, sizes and quantities according to PO number
Product quality warranty	5 years

Master plus production				
Door thickness size	Available 35mm thickness			
Min/max size	Min width	Max width	Min height	Max height
mm	160	925	160	2440
M size	2.35	10	2.35	25

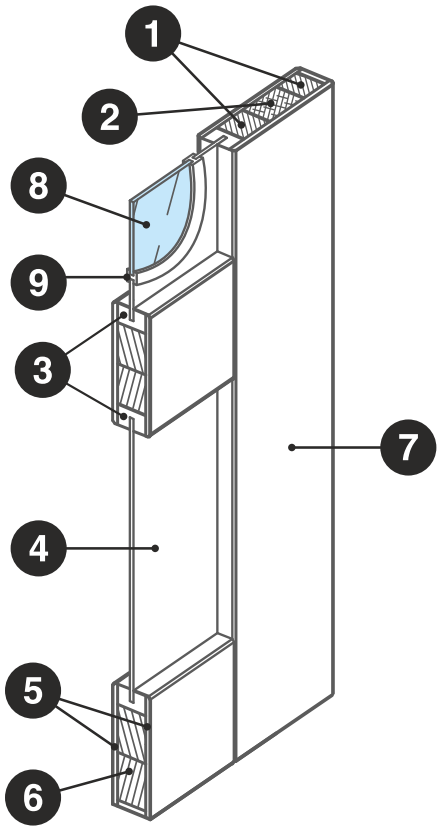

Profile structure

1. Wood
2. Medium density particle (MDP)
3. Medium density fiberboard (MDF)
4. Medium density fiberboard (MDF) panel
5. High density fiberboard (HDF)
6. Wood
7. Painted surface
8. Glass
9. Glass frame list

Available designs

mstrTREND DS1-RNG1

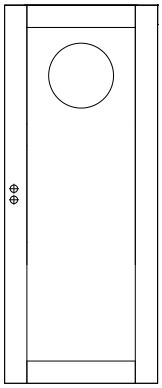

mstrTREND DS1-RNG3

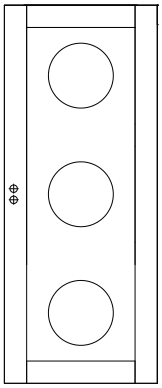

mstrTREND DS3-RNG1

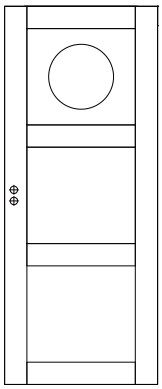

mstrTREND DS3-RNG3

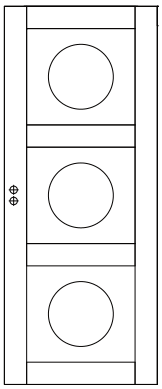

Painted, massive framed door, TREND DESIGN-SQU glass profile

General information	
Product name	mstrTREND DS1-SQU1 painted, mstrTREND DS1-SQU4 painted, mstrTREND DS3-SQU3 painted
Class	unclassified
Door thickness size	40mm
Sound transmittance	28dB
Weight (M21x9)	Door leaf - 24kg Frame SWE 92mm - 7kg
Glass	Glass are intergrated into construction All glass doors in a stock program are supplied with transparent glass All glass are shatterproof
Decoration	2 layer - primer, 1 layer - UV paint (Extra UV paint layer for intensive dark colors)
Standart color	NCS S0502-Y, gloss 25, eco-friendly, water based
Standard fittings	Lock case: 2014; hinges: 6540KS 2 pcs;
Frames	SWE, SWE-NOR, SWE-FLEX, SWE-NOR-FLEX, SMP
Thresholds	E oak, B oak, BB oak, SMP
Non-standard size production	Available
Decoration according NCS / RAL	Any NCS or RAL color
Other coating options	Extra bathroom coating layer for bathroom doors
Other glazing options	Matt, facet
Other lock case and hinges options	Lock case: AGB, 2018, Hinges: D-SIGN hidden hinges
Units per pallet	A pallet can consist different models, sizes and quantities according to PO number
Product quality warranty	5 years

Master plus production				
Door thickness size	Available 35mm thickness			
Min/max size	Min width	Max width	Min height	Max height
mm	160	925	160	2440
M size	2.35	10	2.35	25

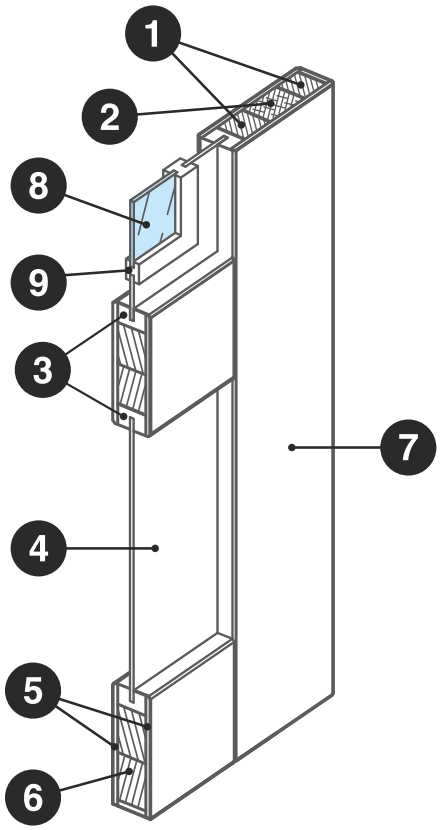

Profile structure

1. Wood
2. Medium density particle (MDP)
3. Medium density fiberboard (MDF)
4. Medium density fiberboard (MDF) panel
5. High density fiberboard (HDF)
6. Wood
7. Painted surface
8. Glass
9. Glass frame list

Available designs

mstrTREND DS1-SQU1

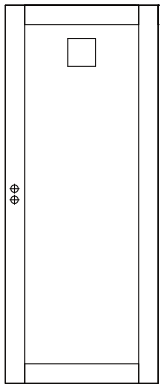

mstrTREND DS1-SQU4

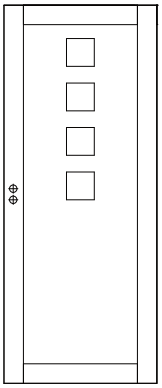

mstrTREND DS3-SQU1

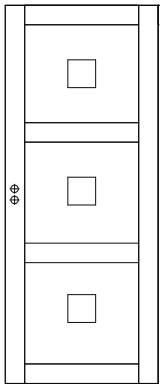

Painted, light cell and light form pressed door

General information	
Product name	mstrLANA cell painted
Class	unclassified
Door thickness size	40mm
Sound transmittance	28dB
Weight (M21x9)	Door leaf - 17kg Frame SWE 92mm - 7kg
Glass	-
Decoration	2 layer - primer, 1 layer - UV paint (Extra UV paint layer for intensive dark colors)
Standart color	NCS S0502-Y, gloss 25, eco-friendly, water based
Standard fittings	Lock case: 2014; hinges: 6540KS 2 pcs;
Frames	SWE, SWE-NOR, SWE-FLEX, SWE-NOR-FLEX, SMP
Thresholds	E oak, B oak, BB oak, SMP
Non-standard size production	Available
Decoration according NCS / RAL	Any NCS or RAL color
Other coating options	-
Other glazing options	-
Other lock case and hinges options	Lock case: AGB, 2018, Hinges: D-SIGN hidden hinges
Units per pallet	A pallet can consist different models, sizes and quantities according to PO number
Product quality warranty	5 years

Master plus production				
Door thickness size	Available 35mm thickness			
Min/max size	Min width	Max width	Min height	Max height
mm	625	925	1740	2440
M size	7	10	18	25

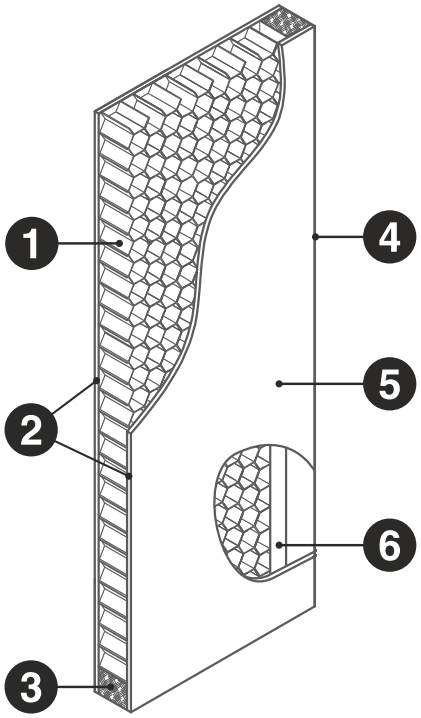

Profile structure

1. Carton honeycomb core
2. High density fiberboard (HDF)
3. Medium density fiberboard (MDF)
4. Melamine edgeband
5. Painted surface
6. Pine bar

Available designs

mstrLANA

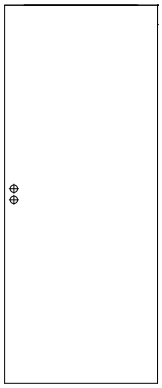

Painted, light cell and light form pressed door

General information	
Product name	mstrFINLAND form press painted, mstrNORGE form press painted
Class	unclassified
Door thickness size	40mm
Sound transmittance	28dB
Weight (M21x9)	Door leaf - 17kg Frame SWE 92mm - 7kg
Glass	-
Decoration	2 layer - primer, 1 layer - UV paint (Extra UV paint layer for intensive dark colors)
Standart color	NCS S0502-Y, gloss 25, eco-friendly, water based
Standard fittings	Lock case: 2014; hinges: 6540KS 2 pcs;
Frames	SWE, SWE-NOR, SWE-FLEX, SWE-NOR-FLEX, SMP
Thresholds	E oak, B oak, BB oak, SMP
Non-standard size production	Available
Decoration according NCS / RAL	Any NCS or RAL color
Other coating options	-
Other glazing options	-
Other lock case and hinges options	Lock case: AGB, 2018, Hinges: D-SIGN hidden hinges
Units per pallet	A pallet can consist different models, sizes and quantities according to PO number
Product quality warranty	5 years

Master plus production				
Door thickness size	Available 35mm thickness			
Min/max size	Min width	Max width	Min height	Max height
mm	625	825	1740	2040
M size	7	9	18	21

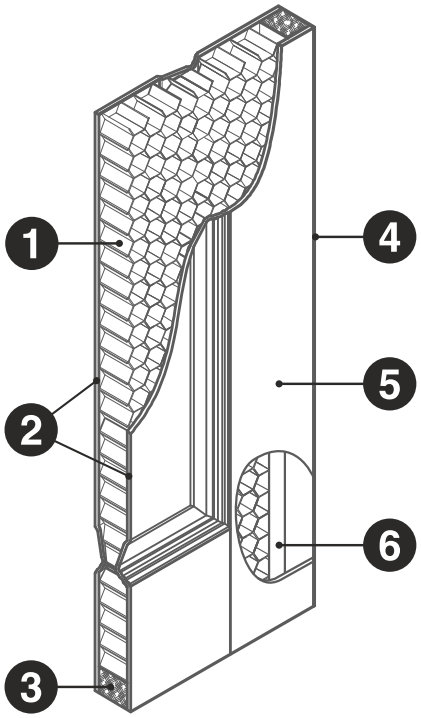

Profile structure

1. Carton honeycomb core
2. High density fiberboard (HDF)
3. Medium density fiberboard (MDF)
4. Melamine edgeband
5. Painted surface
6. Pine bar

Available designs

mstrFINLAND

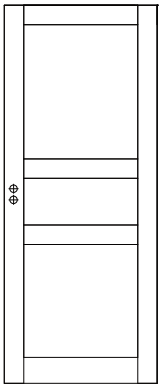

mstrNORGE

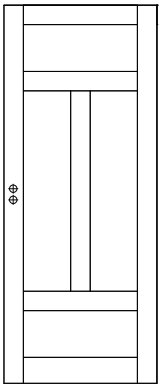

Painted, stable compact door

General information	
Product name	mstrLANA STABLE painted, mstrLANA SATBLE HORIZONT painted
Class	unclassified
Door thickness size	40mm
Sound transmittance	28dB
Weight (M21x9)	Door leaf - 24kg Frame SWE 92mm - 7kg
Glass	-
Decoration	2 layer - primer, 1 layer - UV paint (Extra UV paint layer for intensive dark colors)
Standart color	NCS S0502-Y, gloss 25, eco-friendly, water based
Standard fittings	Lock case: 2014; hinges: 6540KS 2 pcs;
Frames	SWE, SWE-NOR, SWE-FLEX, SWE-NOR-FLEX, SMP
Thresholds	E oak, B oak, BB oak, SMP
Non-standard size production	Available
Decoration according NCS / RAL	Any NCS or RAL color
Other coating options	Extra bathroom coating layer for bathroom doors
Other glazing options	-
Other lock case and hinges options	Lock case: AGB, 2018, Hinges: D-SIGN hidden hinges
Units per pallet	A pallet can consist different models, sizes and quantities according to PO number
Product quality warranty	5 years

Master plus production				
Door thickness size	Available 35mm thickness			
Min/max size	Min width	Max width	Min height	Max height
mm	160	925	160	2440
M size	2.35	10	2.35	25

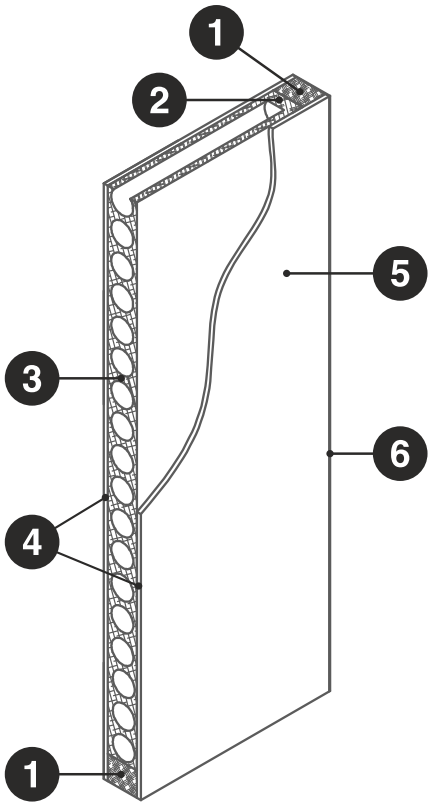

Profile structure

1. Medium density fiberboard (MDF)
2. Medium density chipboard (MDP)
3. Chipboard tubular core
4. High density fiberboard (HDF)
5. Painted surface
6. Melamine edgeband

Available designs

mstrLANA STABLE

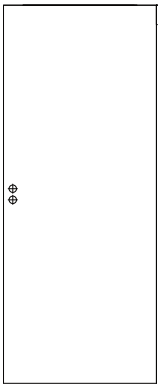

Painted, stable compact cell glass door

General information	
Product name	mstrLANA STABLE DS-RNG1 painted, mstrLANA STABLE DS-RNG3 painted
Class	unclassified
Door thickness size	40mm
Sound transmittance	28dB
Weight (M21x9)	Door leaf - 25kg Frame SWE 92mm - 7kg
Glass	Glass are intergrated into construction All glass doors in a stock program are supplied with transparent glass All glass are shatterproof
Decoration	2 layers - primer, 1 layer - UV paint (Extra UV paint layer for intensive dark colors)
Standart color	NCS S0502-Y, gloss 25, eco-friendly, water based
Standard fittings	Lock case: 2014; hinges: 6540KS 2 pcs;
Frames	SWE, SWE-NOR, SWE-FLEX, SWE-NOR-FLEX, SMP
Thresholds	E oak, B oak, BB oak, SMP
Non-standard size production	Available
Decoration according NCS / RAL	Any NCS or RAL color
Other coating options	Extra bathroom coating layer for bathroom doors
Other glazing options	Matt, facet
Other lock case and hinges options	Lock case: AGB, 2018, Hinges: D-SIGN hidden hinges
Units per pallet	A pallet can consist different models, sizes and quantities according to PO number
Product quality warranty	5 years

Master plus production				
Door thickness size	Available 35mm thickness			
Min/max size	Min width	Max width	Min height	Max height
mm	160	925	160	2440
M size	2.35	10	2.35	25

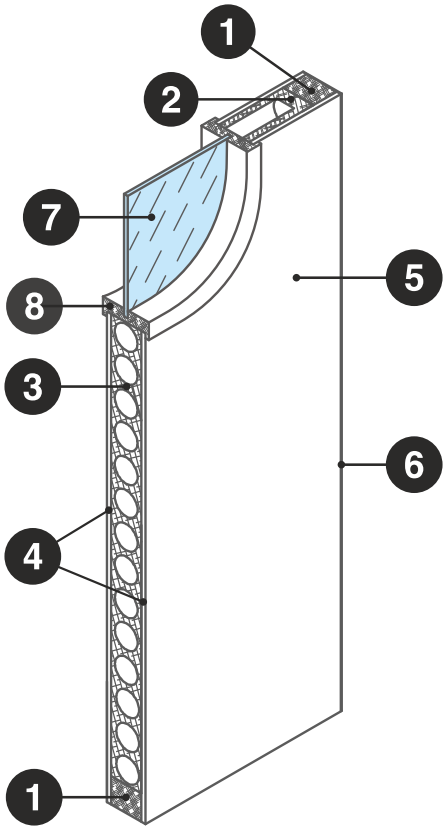

Profile structure

1. Medium density fiberboard (MDF)
2. Medium density chipboard (MDP)
3. Chipboard tubular core
4. High density fiberboard (HDF)
5. Painted surface
6. Melamine edgeband
7. Glass
8. Glass frame

Available designs

mstrLANA STABLE
DS-RNG1

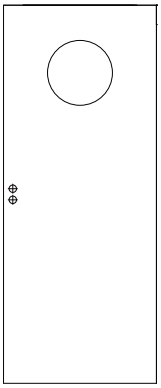

mstrLANA STABLE
DS-RNG3

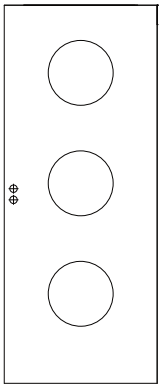

Painted, stable compact cell glass door

General information	
Product name	mstrLANA STABLE DS-SQU1 painted, mstrLANA STABLE DS-SQU4 painted
Class	unclassified
Door thickness size	40mm
Sound transmittance	28dB
Weight (M21x9)	Door leaf - 25kg Frame SWE 92mm - 7kg
Glass	Glass are intergrated into construction All glass doors in a stock program are supplied with transparent glass All glass are shatterproof
Decoration	2 layers - primer, 1 layer - UV paint (Extra UV paint layer for intensive dark colors)
Standart color	NCS S0502-Y, gloss 25, eco-friendly, water based
Standard fittings	Lock case: 2014; hinges: 6540KS 2 pcs;
Frames	SWE, SWE-NOR, SWE-FLEX, SWE-NOR-FLEX, SMP
Thresholds	E oak, B oak, BB oak, SMP
Non-standard size production	Available
Decoration according NCS / RAL	Any NCS or RAL color
Other coating options	Extra bathroom coating layer for bathroom doors
Other glazing options	Matt, facet
Other lock case and hinges options	Lock case: AGB, 2018, Hinges: D-SIGN hidden hinges
Units per pallet	A pallet can consist different models, sizes and quantities according to PO number
Product quality warranty	5 years

Master plus production				
Door thickness size	Available 35mm thickness			
Min/max size	Min width	Max width	Min height	Max height
mm	160	925	160	2440
M size	2.35	10	2.35	25

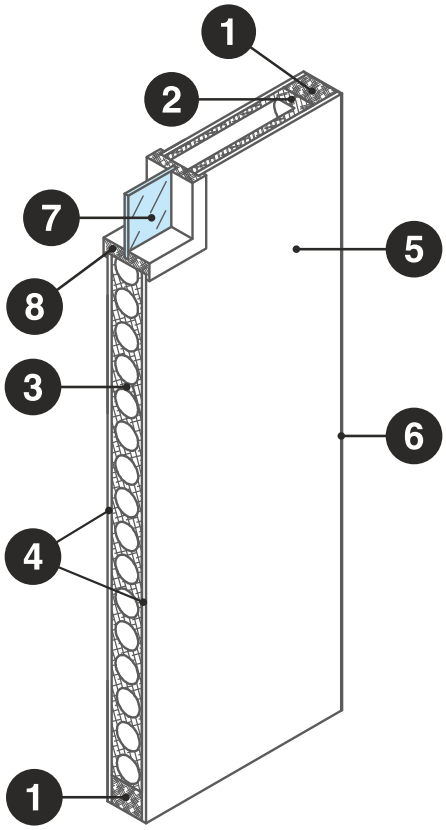

Profile structure

1. Medium density fiberboard (MDF)
2. Medium density chipboard (MDP)
3. Chipboard tubular core
4. High density fiberboard (HDF)
5. Painted surface
6. Melamine edgeband
7. Glass
8. Glass frame

Available designs

mstrLANA STABLE
DS-SQU1

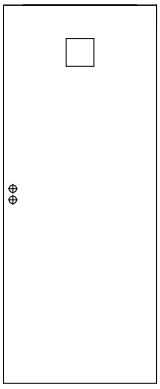

mstrLANA STABLE
DS-SQU4

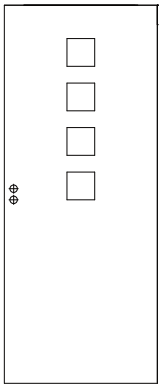

Painted, massive compact cell and compact form pressed door

General information	
Product name	mstrLANA cell painted
Class	unclassified
Door thickness size	40mm
Sound transmittance	36dB
Weight (M21x9)	Door leaf - 46kg Frame SWE 92mm - 7kg
Glass	-
Decoration	2 layers - primer, 1 layer - UV paint (Extra UV paint layer for intensive dark colors)
Standart color	NCS S0502-Y, gloss 25, eco-friendly, water based
Standard fittings	Lock case: 2014; hinges: 6540KS 2 pcs;
Frames	SWE, SWE-NOR, SWE-FLEX, SWE-NOR-FLEX, SMP
Thresholds	E oak, B oak, BB oak, SMP
Non-standard size production	Available
Decoration according NCS / RAL	Any NCS or RAL color
Other coating options	Extra bathroom coating layer for bathroom doors
Other glazing options	-
Other lock case and hinges options	Lock case: AGB, 2018, Hinges: D-SIGN hidden hinges
Units per pallet	A pallet can consist different models, sizes and quantities according to PO number
Product quality warranty	5 years

Master plus production				
Door thickness size	Available 35mm thickness			
Min/max size	Min width	Max width	Min height	Max height
mm (mstrLANA)	160	925	160	2440
M size (mstrLANA)	2.35	10	2.35	25

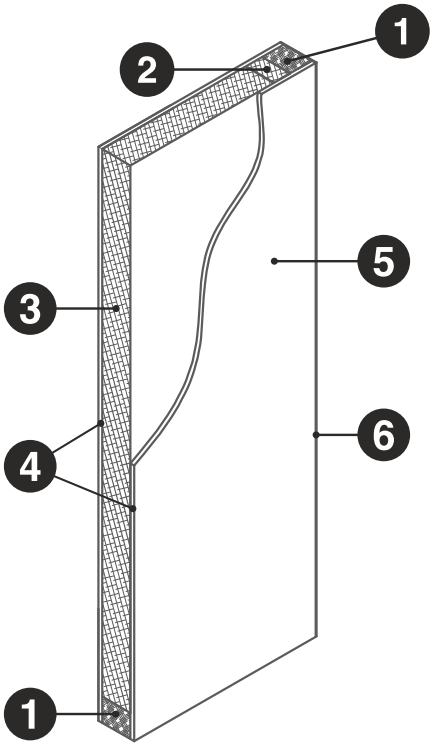

Profile structure

1. Medium density fiberboard (MDF)
2. Medium density chipboard (MDP)
3. Chipboard core
4. High density fiberboard (HDF)
6. Painted surface
7. Melamine edgeband

Available designs

mstrLANA MASSIVE

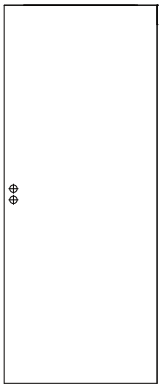

Painted, massive compact cell and compact form pressed door

General information	
Product name	mstrFINLAND COMPACT painted
Class	unclassified
Door thickness size	40mm
Sound transmittance	36dB
Weight (M21x9)	Door leaf - 46kg Frame SWE 92mm - 7kg
Glass	-
Decoration	2 layers - primer, 1 layer - UV paint (Extra UV paint layer for intensive dark colors)
Standart color	NCS S0502-Y, gloss 25, eco-friendly, water based
Standard fittings	Lock case: 2014; hinges: 6540KS 2 pcs;
Frames	SWE, SWE-NOR, SWE-FLEX, SWE-NOR-FLEX, SMP
Thresholds	E oak, B oak, BB oak, SMP
Non-standard size production	Available
Decoration according NCS / RAL	Any NCS or RAL color
Other coating options	Extra bathroom coating layer for bathroom doors
Other glazing options	-
Other lock case and hinges options	Lock case: AGB, 2018, Hinges: D-SIGN hidden hinges
Units per pallet	A pallet can consist different models, sizes and quantities according to PO number
Product quality warranty	5 years

Master plus production				
Door thickness size	Available 35mm thickness			
Min/max size	Min width	Max width	Min height	Max height
mm (mstrLANA)	625	825	1740	2040
M size (mstrLANA)	7	9	18	21

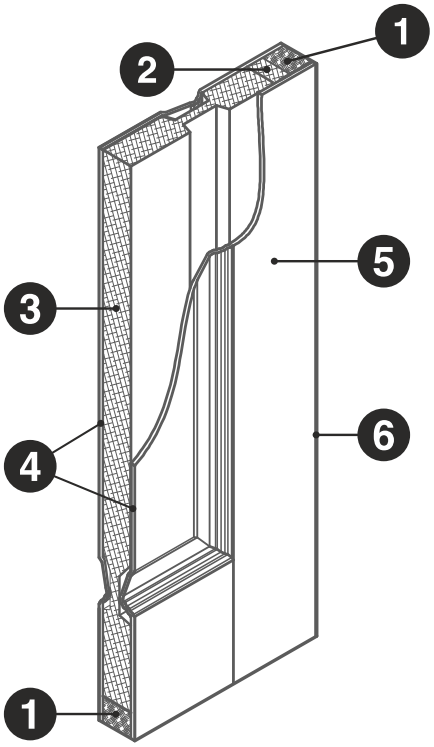

Profile structure

1. Medium density fiberboard (MDF)
2. Medium density chipboard (MDP)
3. Chipboard core
4. High density fiberboard (HDF)
6. Painted surface
7. Melamine edgeband

Available designs

mstrFINLAND
COMPACT

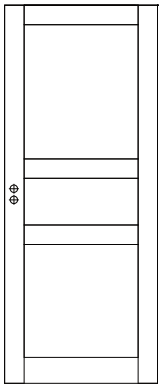

Sliding type doors, painted massive framed door

General information	
Class	unclassified
Door thickness size	40mm
Sound transmittance	28dB
Weight (M21x9)	Door leaf ~ 23kg filling doors / ~21kg glass doors
Glass	Glass are intergrated into construction All glass doors in a stock program are supplied with transparent glass All glass are shatterproof
Decoration	2 layer - primer, 1 layer - UV paint (Extra UV paint layer for intensive dark colors)
Standart color	NCS S0502-Y, gloss 25, eco-friendly, water based
Standard fittings	Pull ring handle with ring 150x20mm; Handle ROCA 46x9 – 2pcs.
Frames	-
Thresholds	-
Non-standard size production	Available
Decoration according NCS / RAL	Any NCS or RAL color
Other coating options	Extra bathroom coating layer for bathroom doors
Other glazing options	-
Other lock case and hinges options	Lock case: Sliding lock case for WC closing
Units per pallet	A pallet can consist different models, sizes and quantities according to PO number
Product quality warranty	5 years

Master plus production				
Door thickness size	Available 35mm thickness			
Min/max size	Min width	Max width	Min height	Max height
mm	160	925	160	2440
M size	2.35	10	2.35	25

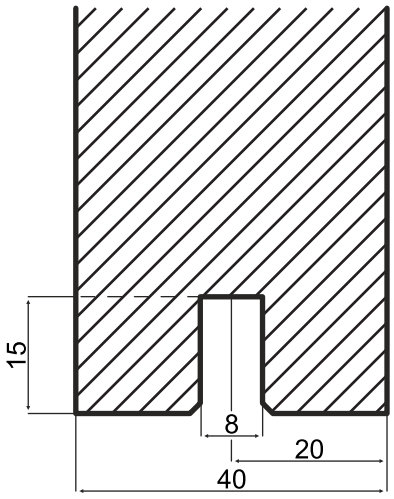

Available designs, CLASSIC and TREND100 profile

mstrFINLAND

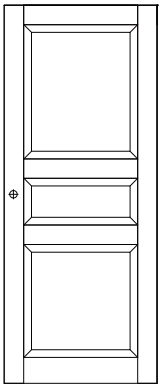

mstrNORGE

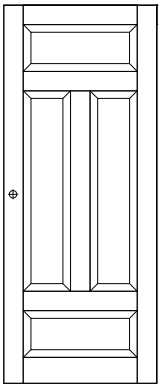

mstrDANNEBROG

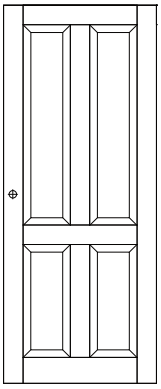

mstrSWEDISH

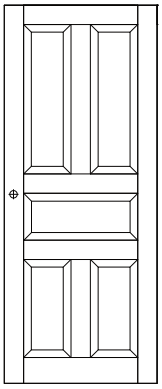

mstrFINLAND 6SP

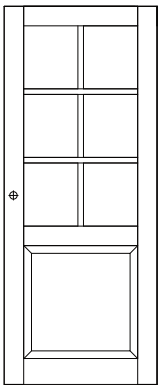

mstrNORGE 10SP

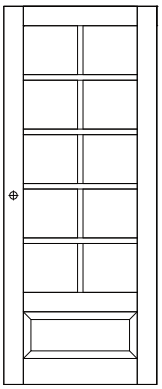

mstrISLAND 12SP

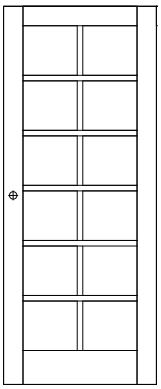

mstrTREND100-1

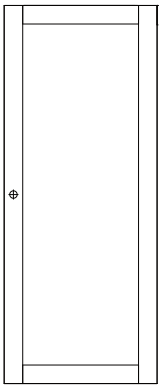

mstrTREND100-3

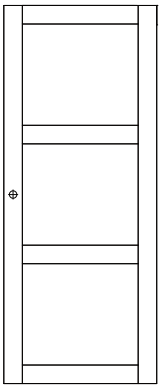

mstrTREND100-1SP

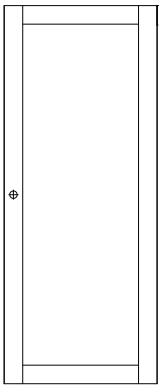

mstrTREND100-3SP

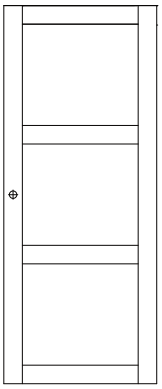

mstrTREND100-4SP

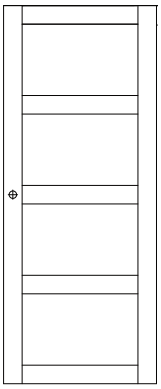

Available designs, TREND105 and TREND120 profile

mstrTREND105-1

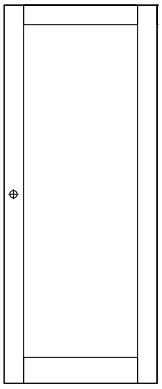

mstrTREND105-3

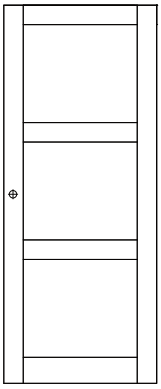

mstrTREND105-4

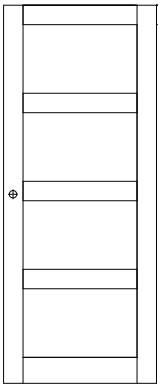

mstrTREND105-1SP

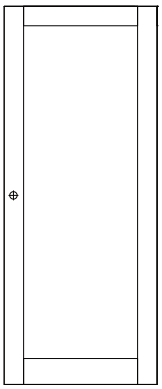

mstrTREND105-3SP

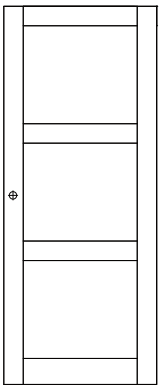

mstrTREND105-4SP

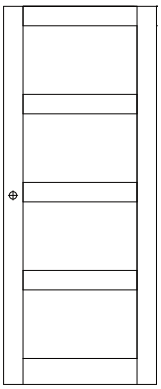

mstrTREND120-1

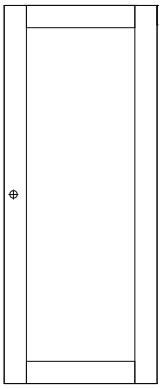

mstrTREND120-3

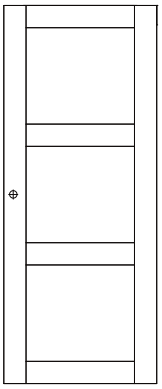

mstrTREND120-4

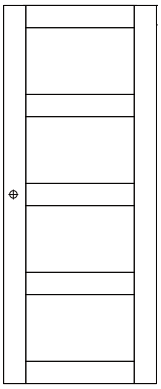

mstrTREND120-1SP

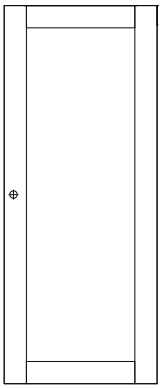

mstrTREND120-3SP

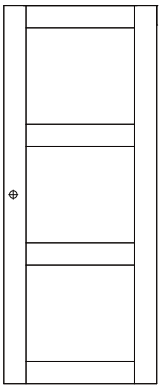

mstrTREND120-4SP

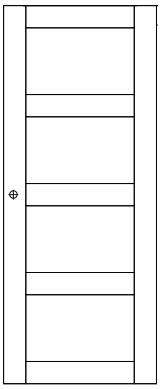

Available designs, DESIGN profile

mstrFINLAND DS1

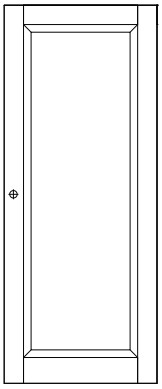

mstrFINLAND DS2

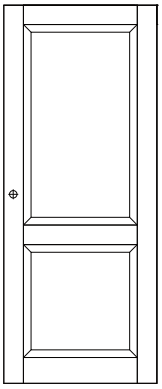

mstrFINLAND DS3

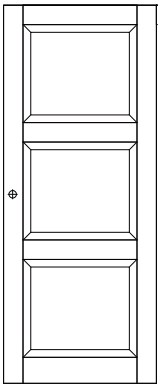

mstrFINLAND DS1-TR

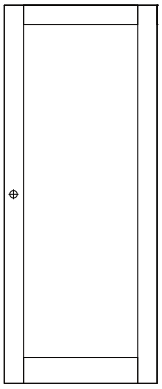

mstrFINLAND DS3-TR

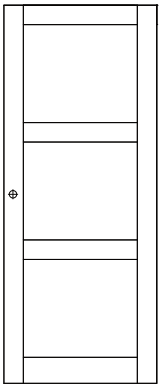

mstrTREND DS1-CL

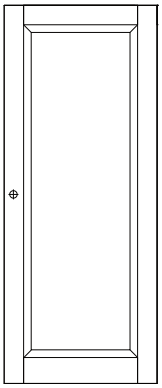

mstrTREND DS3-CL

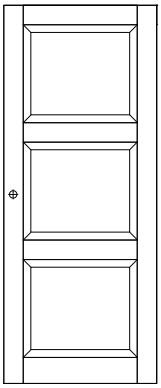

mstrTREND DS1-RNG1

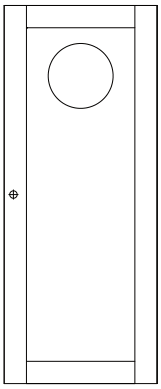

mstrTREND DS1-RNG3

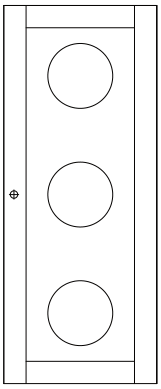

mstrTREND DS3-RNG1

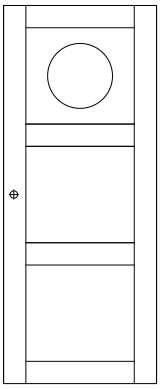

mstrTREND DS3-RNG3

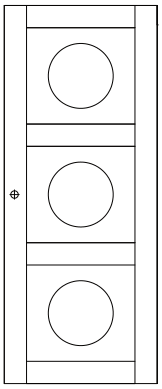

mstrTREND DS1-SQU1

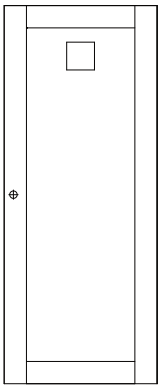

mstrTREND DS1-SQU4

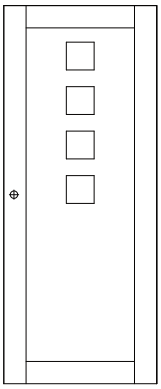

mstrTREND DS3-SQU3

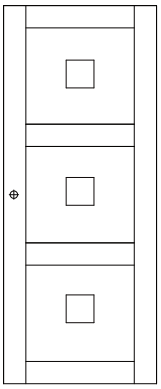

Sliding type doors, painted light cell and light form pressed door

General information	
Class	unclassified
Door thickness size	40mm
Sound transmittance	28dB
Weight (M21x9)	Door leaf ~ 17kg
Glass	-
Decoration	2 layer - primer, 1 layer - UV paint (Extra UV paint layer for intensive dark colors)
Standart color	NCS S0502-Y, gloss 25, eco-friendly, water based
Standard fittings	Pull ring handle with ring 150x20mm; Handle ROCA 46x9 – 2pcs.
Frames	-
Thresholds	-
Non-standard size production	Available
Decoration according NCS / RAL	Any NCS or RAL color
Other coating options	-
Other glazing options	-
Other lock case and hinges options	Lock case: Sliding lock case for WC closing
Units per pallet	A pallet can consist different models, sizes and quantities according to PO number
Product quality warranty	5 years

Master plus production				
Door thickness size	Available 35mm thickness			
Min/max size	Min width	Max width	Min height	Max height
mm	625	925	1740	2040
M size	7	10	18	21

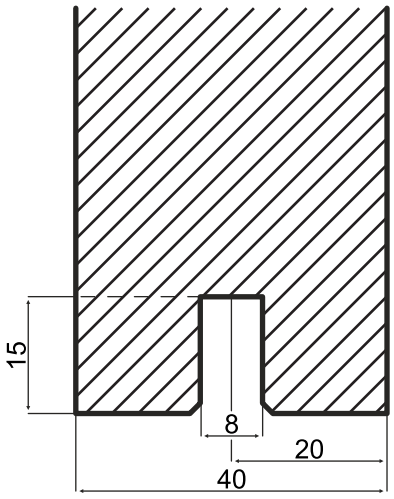

Available designs

mstrLANA

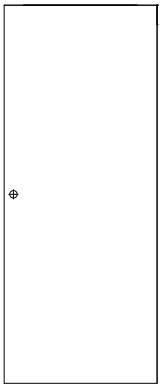

mstrFINLAND

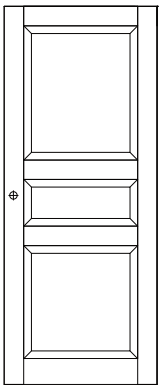

mstrNORGE

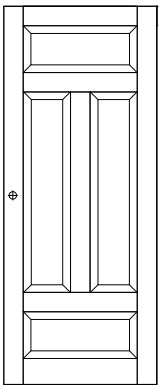

Sliding type doors, painted stable compact door

General information	
Class	unclassified
Door thickness size	40mm
Sound transmittance	28dB
Weight (M21x9)	Door leaf ~ 24kg filling doors / ~25kg glass doors
Glass	Glass are intergrated into construction All glass doors in a stock program are supplied with transparent glass All glass are shatterproof
Decoration	2 layer - primer, 1 layer - UV paint (Extra UV paint layer for intensive dark colors)
Standart color	NCS S0502-Y, gloss 25, eco-friendly, water based
Standard fittings	Pull ring handle with ring 150x20mm; Handle ROCA 46x9 – 2pcs.
Frames	-
Thresholds	-
Non-standard size production	Available
Decoration according NCS / RAL	Any NCS or RAL color
Other coating options	Extra bathroom coating layer for bathroom doors
Other glazing options	-
Other lock case and hinges options	Lock case: Sliding lock case for WC closing
Units per pallet	A pallet can consist different models, sizes and quantities according to PO number
Product quality warranty	5 years

Master plus production				
Door thickness size	Available 35mm thickness			
Min/max size	Min width	Max width	Min height	Max height
mm	160	925	160	2440
M size	2.35	10	2.35	25

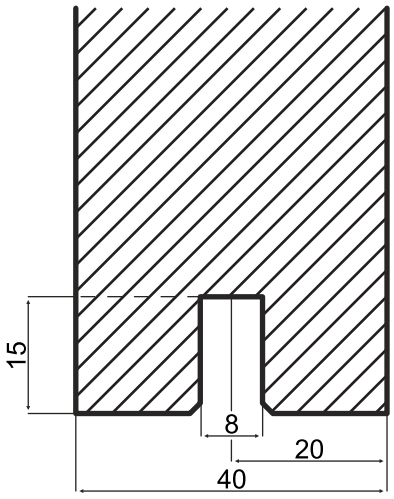

Available designs

mstrLANA STABLE

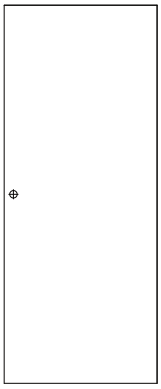

mstrLANA STABLE
DS-RNG1

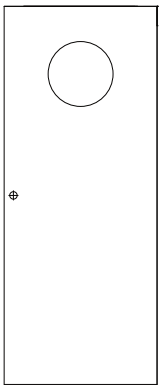

mstrLANA STABLE
DS-RNG3

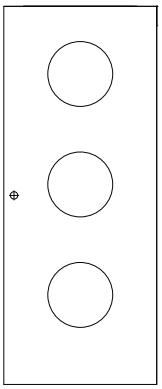

mstrLANA STABLE
DS-SQU1

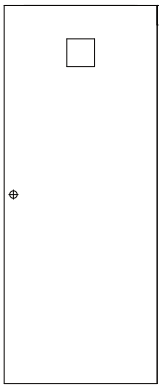

mstrLANA STABLE
DS-SQU4

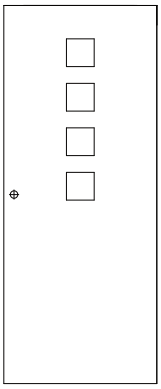

Sliding type doors, painted massive compact cell and form pressed door

General information	
Class	unclassified
Door thickness size	40mm
Sound transmittance	36dB
Weight (M21x9)	Door leaf ~ 46kg
Glass	-
Decoration	2 layer - primer, 1 layer - UV paint (Extra UV paint layer for intensive dark colors)
Standart color	NCS S0502-Y, gloss 25, eco-friendly, water based
Standard fittings	Pull ring handle with ring 150x20mm; Handle ROCA 46x9 – 2pcs.
Frames	-
Thresholds	-
Non-standard size production	Available
Decoration according NCS / RAL	Any NCS or RAL color
Other coating options	Extra bathroom coating layer for bathroom doors
Other glazing options	-
Other lock case and hinges options	Lock case: Sliding lock case for WC closing
Units per pallet	A pallet can consist different models, sizes and quantities according to PO number
Product quality warranty	5 years

Master plus production				
Door thickness size	Available 35mm thickness			
Min/max size	Min width	Max width	Min height	Max height
mm (mstrLANA)	160	1040	160	2440
M size (mstrLANA)	2.35	11	2.35	25
mm (mstrFINLAND)	625	825	1740	2040
M size (mstrFINLAND)	7	9	18	21

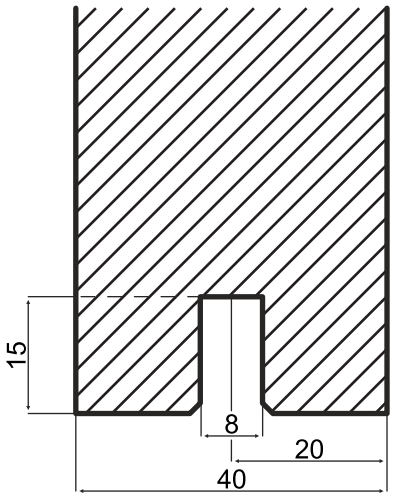

Available designs

mstrLANA MASSIVE

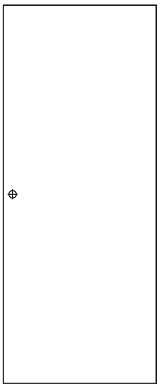

mstrFINLAND COMPACT

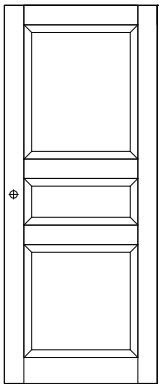

Painted frames for interior doors

General information	
Product name	SWE 68-147, SWE-NOR 92, SWE-FLEX 75-147, SWE-NOR-FLEX 92
Class	unclassified
Sound transmittance	-
Weight(M21x9)	Frame SWE 92mm - 7kg
Construction	Finger jointed wood (see construction drawings for more detailed information)
Decoration	3 layers - primer, 1 layer - UV paint (Extra UV paint layer for intensive dark colors)
Standart color	NCS S0502-Y, gloss 25, eco-friendly, water based
Standart fittings	Hinges: 6540KS (Frame part) 2 pcs.; Lock plate: 0045;
Thresholds	E Oak, B Oak, 92 BB Oak
Non-standart size production	Available
Decoration according NCS / RAL	Any NCS or RAL color
Other coating options	Extra bathroom coating layer for bathroom doors
Product quality warranty	5 years

Master plus production				
Min/max size	Min width	Max width	Min height	Max height
mm	687	1919	1789	2489
M size	7	19	18	25

SWE-NOR-FLEX 92 frame

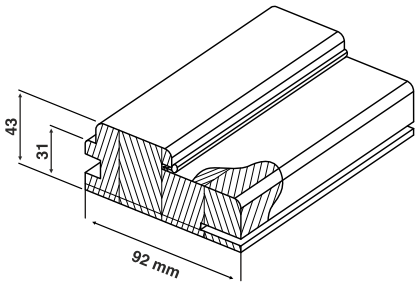

SWE 68-147 frame

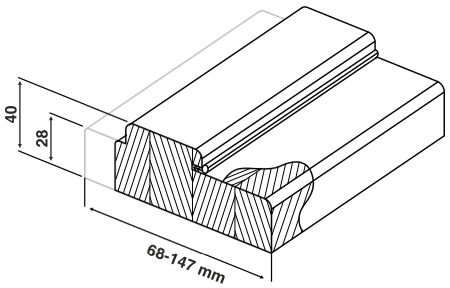

SWE-NOR 92 frame

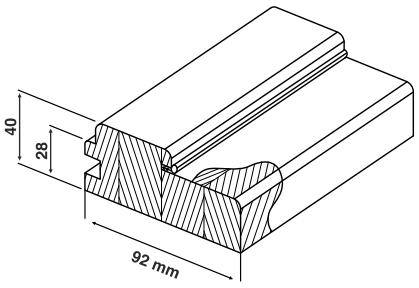

SWE-FLEX 75-147 frame

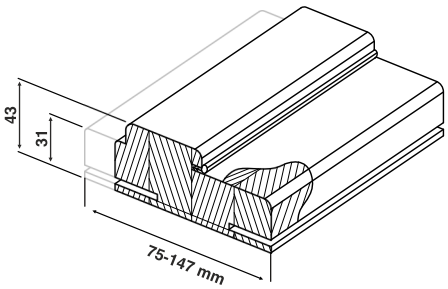

SWE 68-147, SWE-NOR 92 frame - top

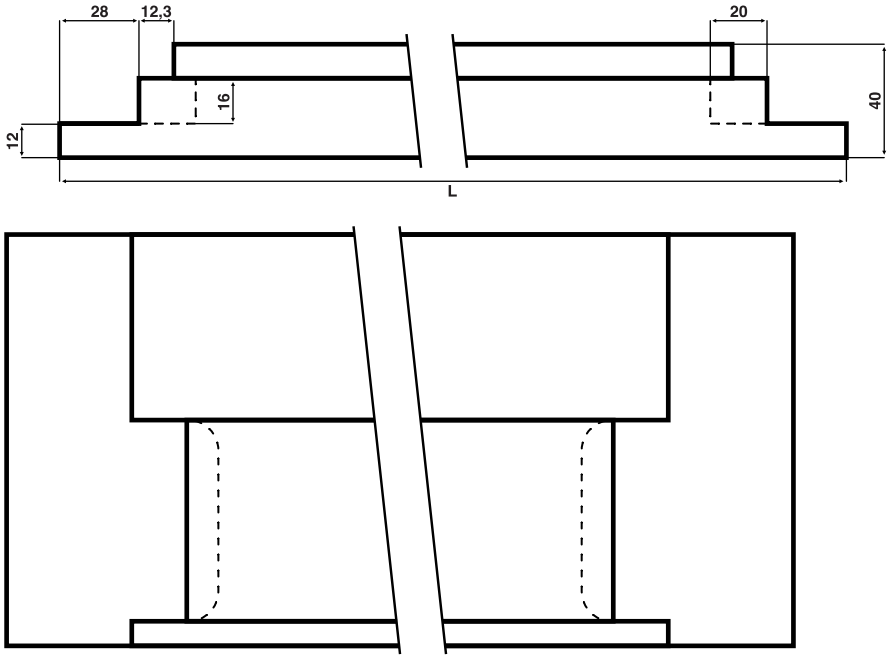

FRAME GASKET
Code: S104/4

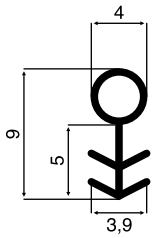

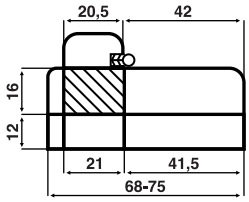

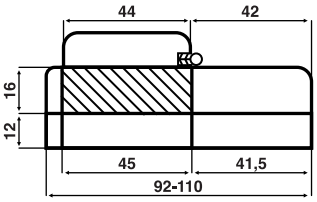

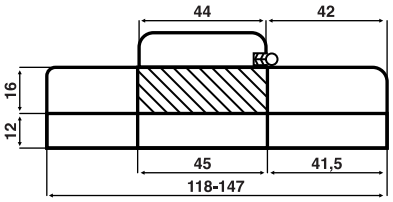

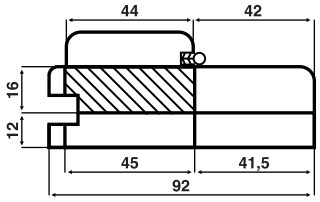

Dimensions are provided for standard dimensions door leaf

	M7	M8	M9	M10	M11	M12	M13	M14	M13.1	M15	M17	M19
Door leaf width	625	725	825	925	625+398	725+398	825+398	925+398	625+625	725+725	825+825	925+925
L - SWE top length	687	787	887	987	1092	1192	1292	1392	1319	1519	1719	1919

SWE 68-147, SWE-NOR 92 frame - sides

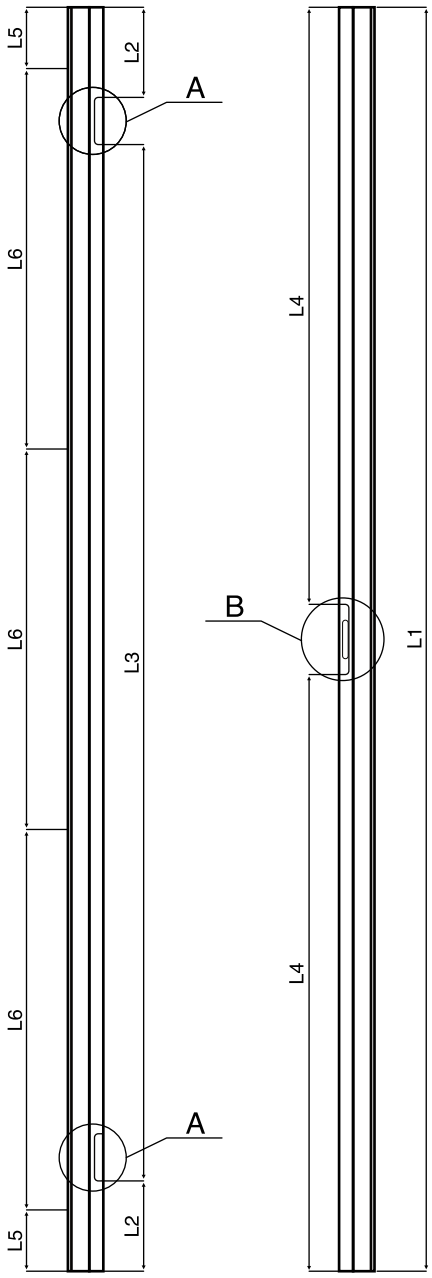

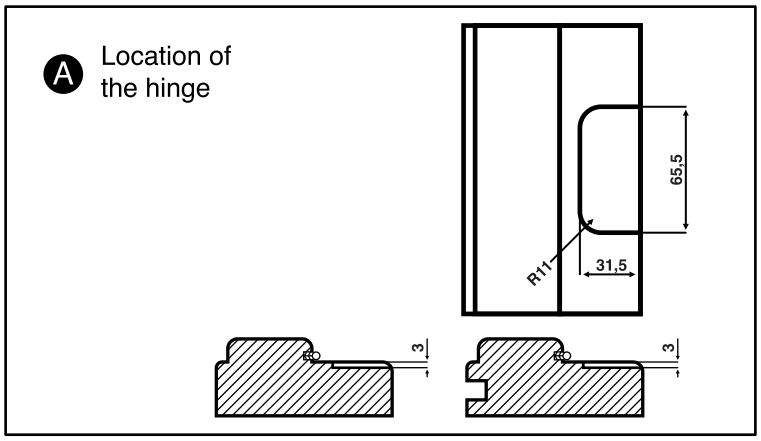

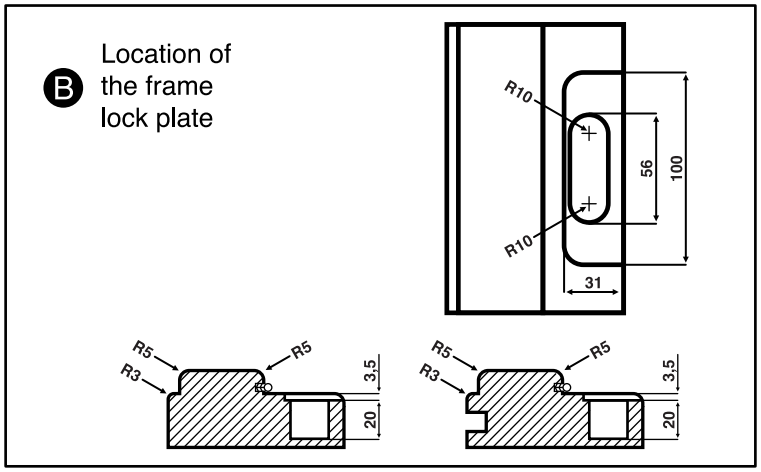

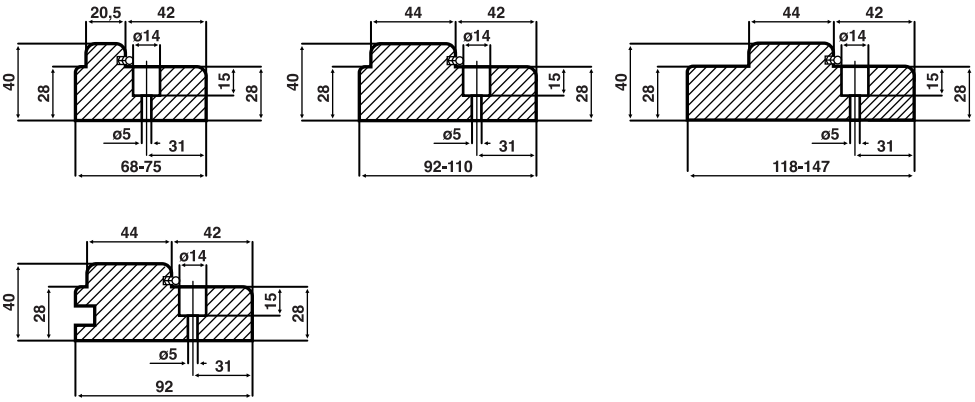

Dimensions are provided for standard dimensions door leaf

	L1	L2	L3	L4	L5	L6
	Frame side length	Distance to the hinge	Between hinges	Distance to the frame lock plate	Distance to the center of the mounting hole	Distance between mounting holes
M19	1877	136	1540	888.5	91	565
M20	1977	186	1540	938.5	141	565
M20.5	2037	216	1540	968.5	171	565
M21	2077	236	1540	988.5	191	565

FRAME GASKET

Code: S104/4

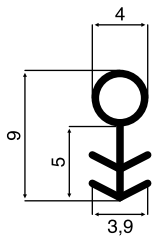

SWE-FLEX 75-147, SWE-NOR-FLEX 92 frame - top

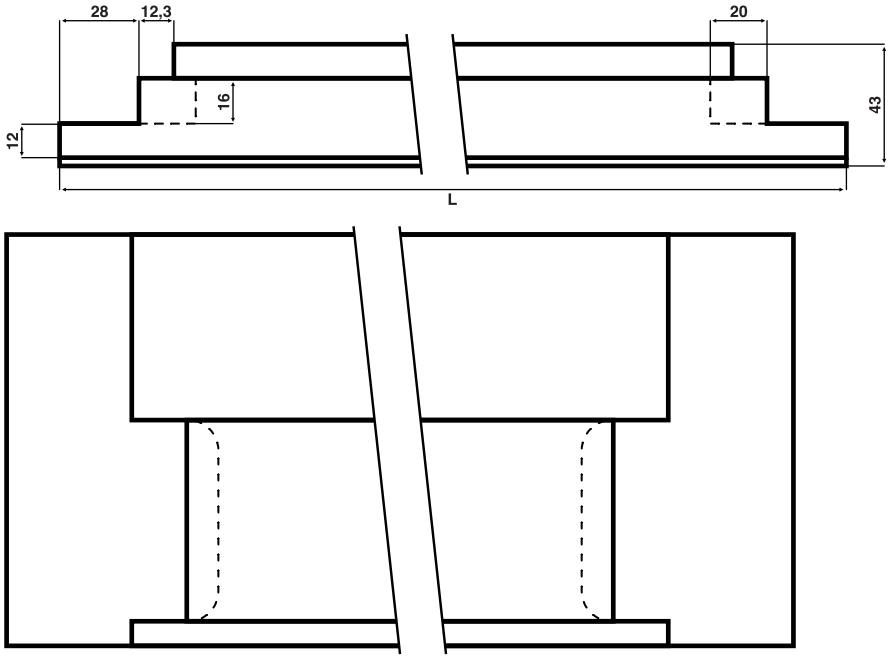

FRAME GASKET

Code: S104/4

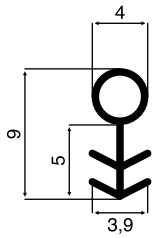

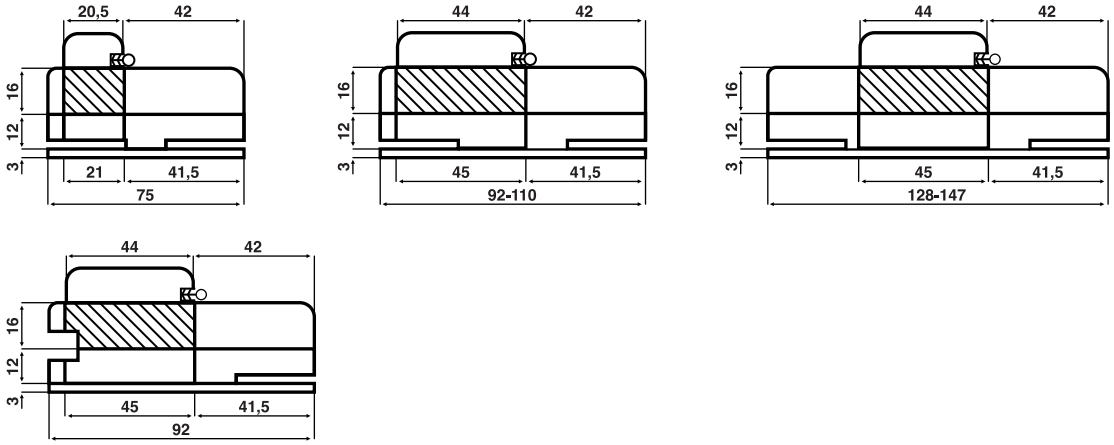

Dimensions are provided for standard dimensions door leaf

	M7	M8	M9	M10	M11	M12	M13	M14	M13.1	M15	M17	M19
Door leaf width	625	725	825	925	625+398	725+398	825+398	925+398	625+625	725+725	825+825	925+925
L - SWE top length	693	793	893	993	1098	1198	1298	1398	1325	1525	1725	1925
Data: 2020-09-16												

SWE-FLEX 75-147, SWE-NOR-FLEX 92 frame - sides

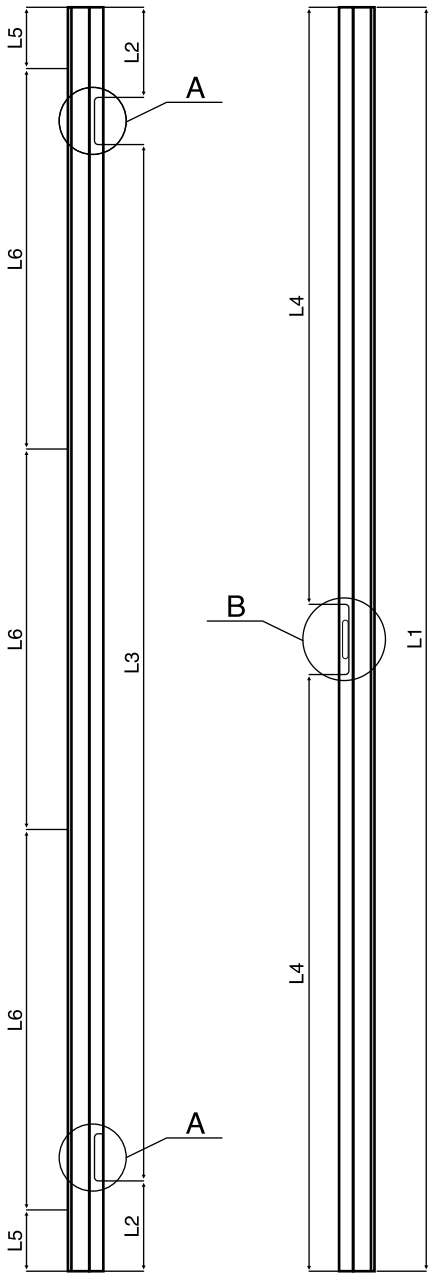

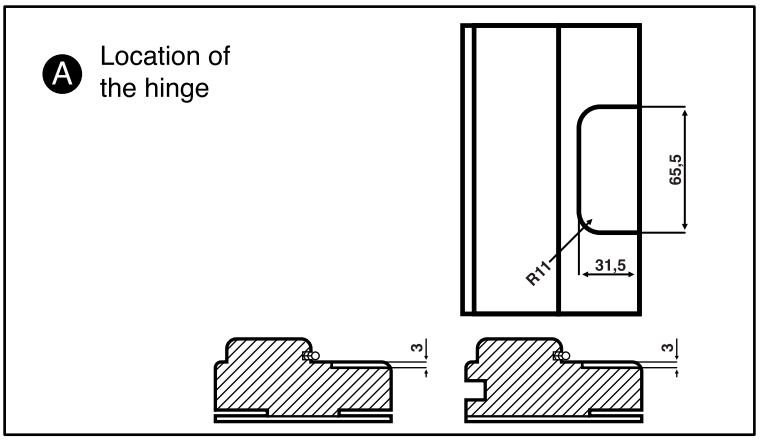

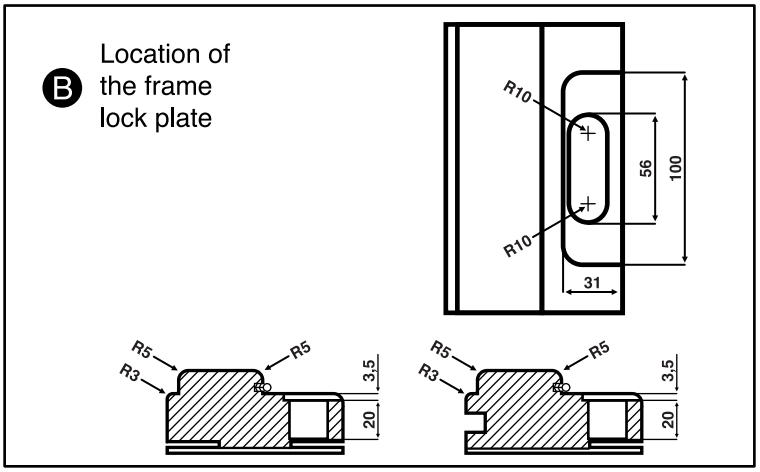

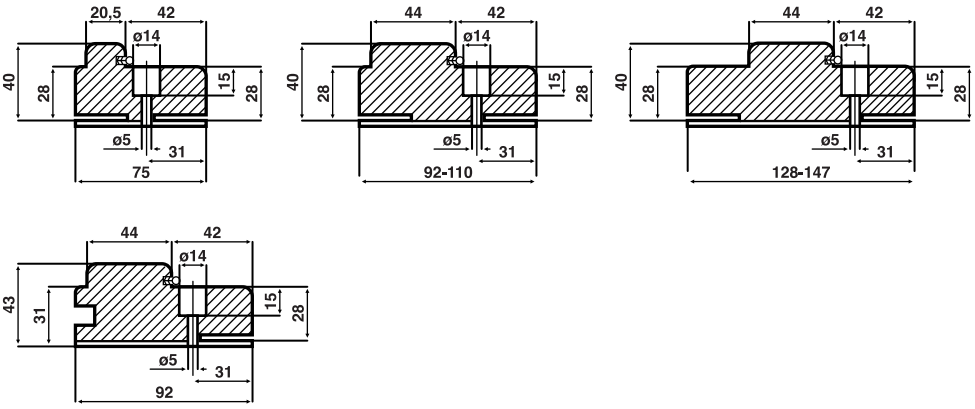

Dimensions are provided for standard dimensions door leaf

	L1	L2	L3	L4	L5	L6
	Frame side length	Distance to the hinge	Between hinges	Distance to the frame lock plate	Distance to the center of the mounting hole	Distance between mounting holes
M19	1877	136	1540	888.5	91	565
M20	1977	186	1540	938.5	141	565
M20.5	2037	216	1540	968.5	171	565
M21	2077	236	1540	988.5	191	565

FRAME GASKET

Code: S104/4

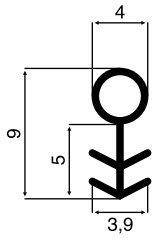

Thresholds for interior doors

General information	
Product name	E 68-147 mm , B 68-147 mm, BB 68-147 mm
Class	unclassified
Sound transmittance	-
Weight (M9)	~1kg
Construction	Finger joointed oak wood (see construction drawings for more detailed information).
Decoration	Transparent lacquering, 2 layers of lacquer
Standart fittings	-
Frame	Suitable for all internally used frames
Non-standart size production	Available
Decoration according NCS / RAL	-
Other coating options	Can be oiled
Product quality warranty	5 years

Master plus production		
Min/max size	Min width	Max width
mm	631	1863
M size	7	19

E 68-147 mm threshold

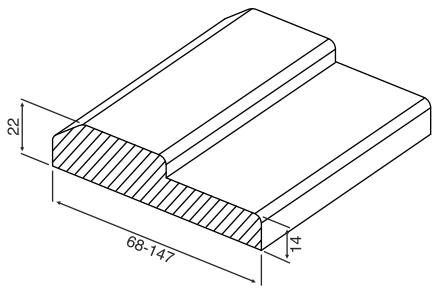

B 68-147 mm threshold

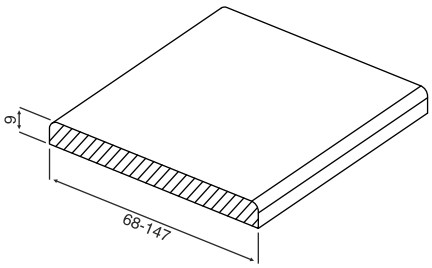

BB 68-147 mm threshold

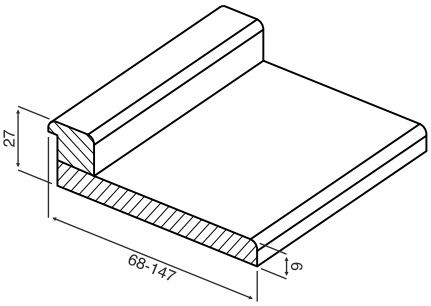

Thresholds for SWE, SWE-NOR, SWE-FLEX, SWE-NOR-FLEX frame

Profile E

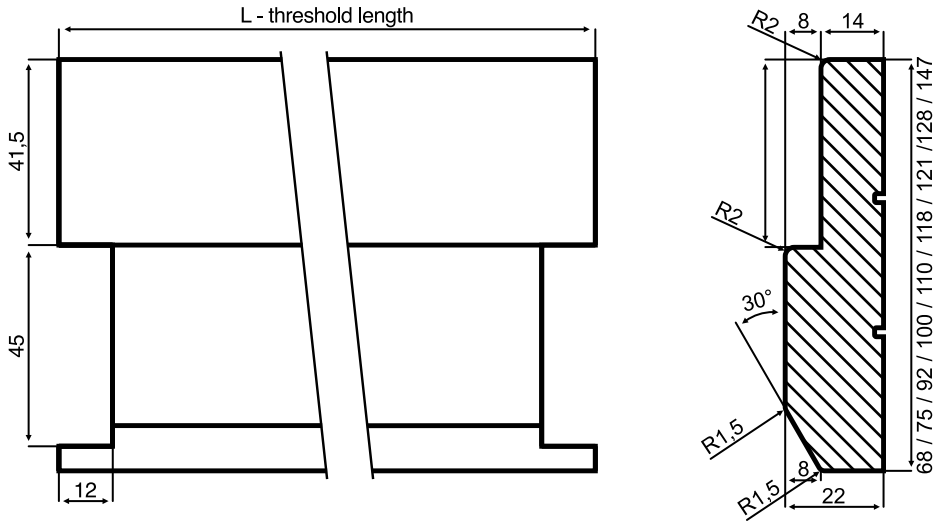

Profile Plate - B

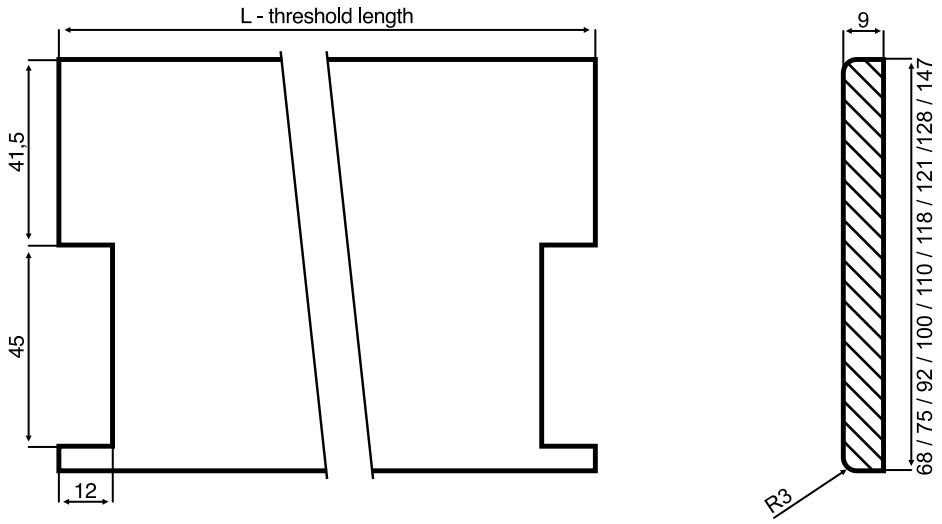

Profile Bathr. - BB

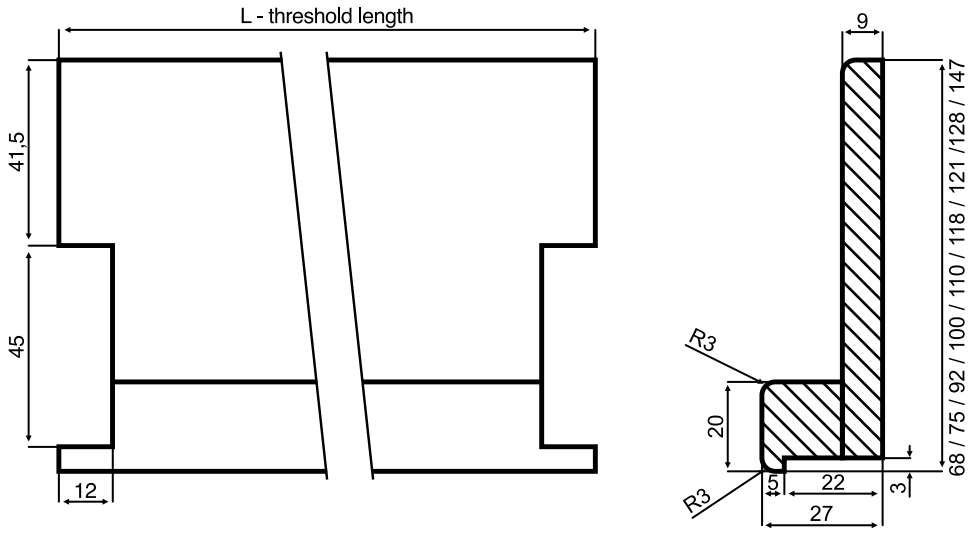

Dimensions are provided for standard dimensions door leaf

	M7	M8	M9	M10	M11	M12	M13	M14	M13.1	M15	M17	M19
Door leaf width	625	725	825	925	625+398	725+398	825+398	925+398	625+625	725+725	825+825	925+925
L - threshold length	631	731	831	931	1036	1136	1236	1336	1263	1463	1663	1863

Painted inserts for interior doors

General information	
Product name	INSERT painted, INSERT flex painted
Class	unclassified
Weight(M21x9)	-
Construction	HDF/MDF
Decoration	3 layers - primer, 1 layer - UV paint (Extra UV paint layer for intensive dark colors)
Standart color	NCS S0502-Y, gloss 25, eco-friendly, water based painting system
Standart fittings	-
Frames	SWE-NOR 92, SWE-NOR-FLEX 92
Available moldings	ALMUE 92 painted, GLAT 65 painted, ALMUE flex 92 painted, GLAT flex 65 painted
Non-standart size production	Available
Decoration according NCS / RAL	Any NCS or RAL color
Other coating options	Extra bathroom coating layer for bathroom doors
Product quality warranty	5 years

INSERT for SWE-NOR 92 frame

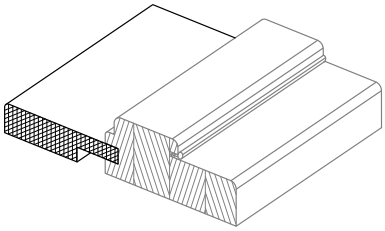

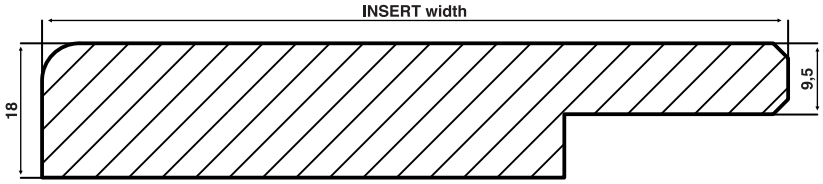

INSERT for SWE-NOR-FLEX 92 frame

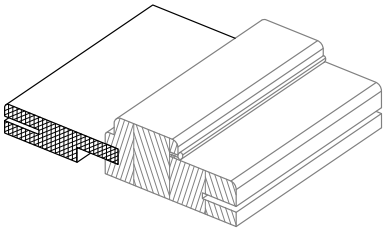

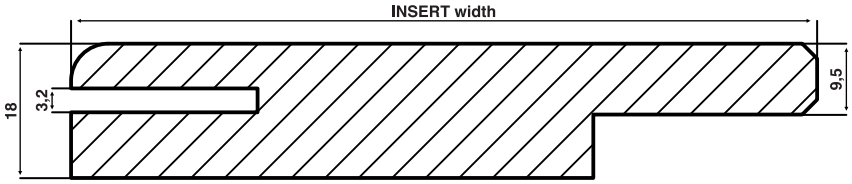

Gaps between door leaf and frame for single doors

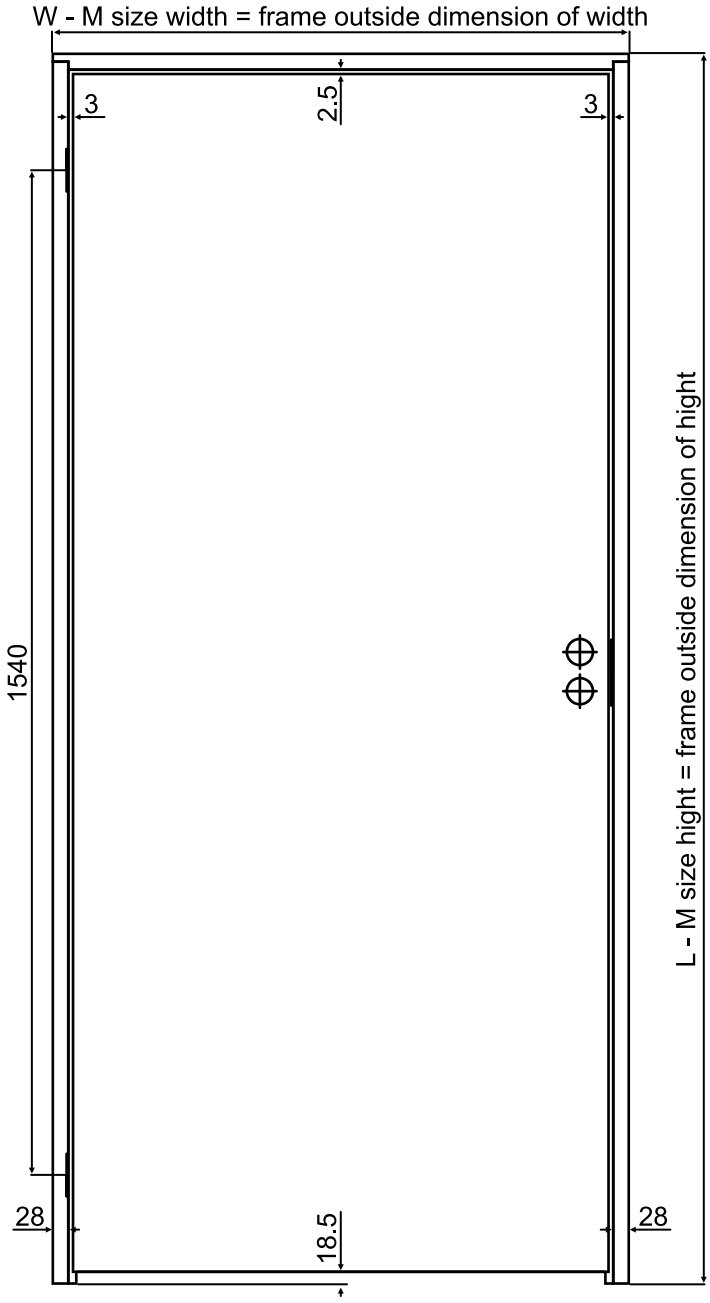

M size	L	W
19 x 7	1889	687
19 x 8	1889	787
19 x 9	1889	887
19 x 10	1889	987
20 x 7	1989	687
20 x 8	1989	787
20 x 9	1989	887
20 x 10	1989	987
20.5 x 7	2049	687
20.5 x 8	2049	787
20.5 x 9	2049	887
20.5 x 10	2049	987
21 x 7	2089	687
21 x 8	2089	787
21 x 9	2089	887
21 x 10	2089	987

Gaps between door leaf and frame for double doors

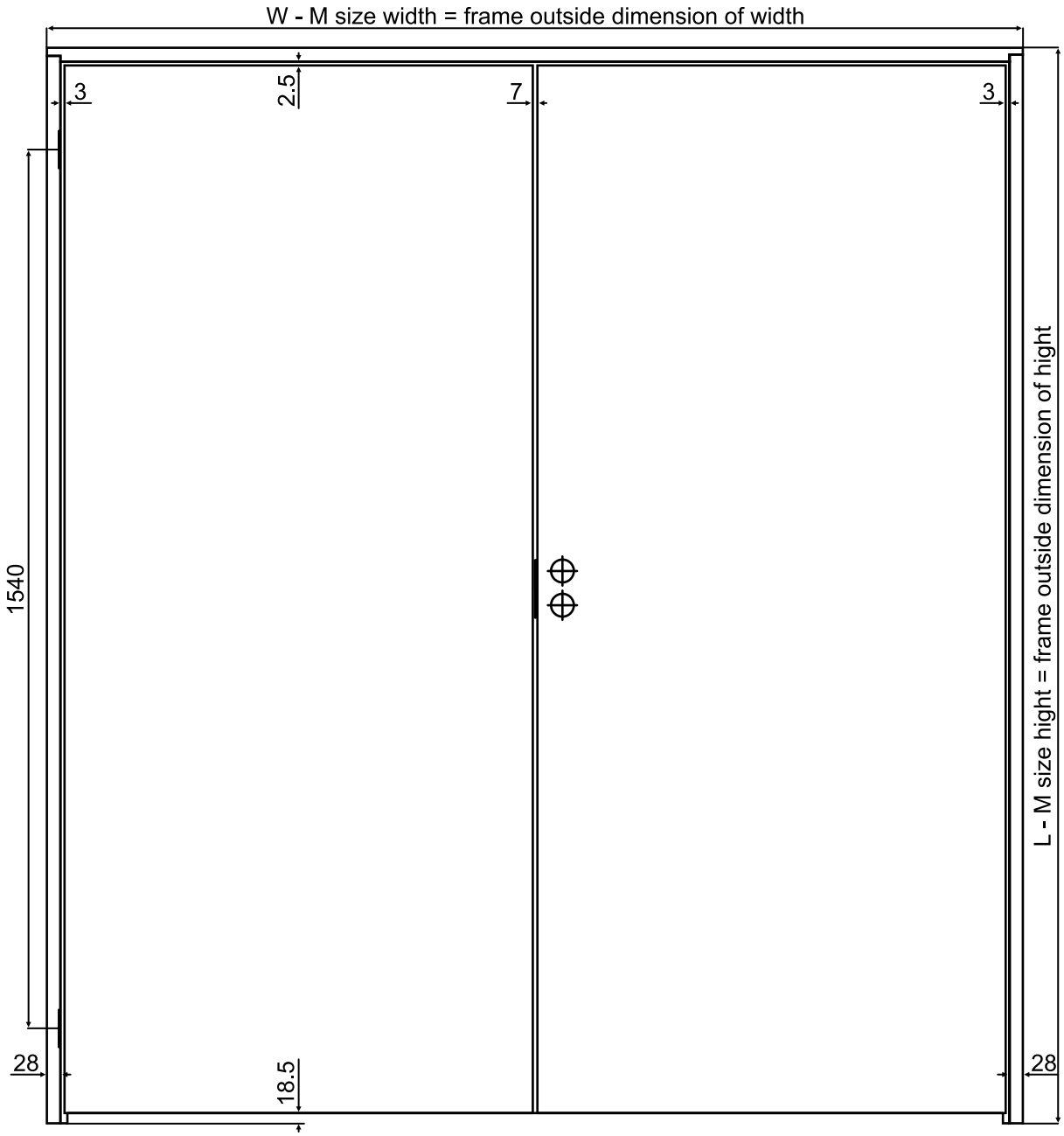

M size	L	W
19 x 11	1889	1092
19 x 12	1889	1192
19 x 13	1889	1292
19 x 14	1889	1392
19 x 13.1	1889	1319
19 x 15	1889	1519
19 x 17	1889	1719
19 x 19	1889	1919
20 x 11	1989	1092
20 x 12	1989	1192
20 x 13	1989	1292
20 x 14	1989	1392
20 x 13.1	1989	1319
20 x 15	1989	1519
20 x 17	1989	1719
20 x 19	1989	1919

M size	L	W
20.5 x 13.1	2049	1319
20.5 x 15	2049	1519
20.5 x 17	2049	1719
20.5 x 19	2049	1919
20.5 x 13.1	2049	1319
20.5 x 15	2049	1519
20.5 x 17	2049	1719
20.5 x 19	2049	1919
21 x 13.1	2089	1319
21 x 15	2089	1519
21 x 17	2089	1719
21 x 19	2089	1919
21 x 13.1	2089	1319
21 x 15	2089	1519
21 x 17	2089	1719
21 x 19	2089	1919

Interior doors dimensions table

Dimensions table (mm)

M Size	Door leaf size	Frame outside dimension	Door way
19 x 4 M	1840 x 398	-	-
19 x 5 M	1840 x 498	-	-
19 x 7 M	1840 x 625	1889 x 687	1900 x 710
19 x 8 M	1840 x 725	1889 x 787	1900 x 810
19 x 9 M	1840 x 825	1889 x 887	1900 x 910
19 x 10 M	1840 x 925	1889 x 987	1900 x 1010
19 x 11 M M7 + M4	1840 x 625 + 398	1889 x 1092	1900 x 1114
19 x 12 M M8 + M4	1840 x 725 + 398	1889 x 1192	1900 x 1214
19 x 13 M M9 + M4	1840 x 825 + 398	1889 x 1292	1900 x 1314
19 x 14 M M10 + M4	1840 x 925 + 398	1889 x 1392	1900 x 1414
19 x 13.1 M M7 + M7	1840 x 625 + 625	1889 x 1319	1900 x 1340
19 x 15 M M8 + M8	1840 x 725 + 725	1889 x 1519	1900 x 1540
19 x 17 M M9 + M9	1840 x 825 + 825	1889 x 1719	1900 x 1740
19 x 19 M M10 + M10	1840 x 925 + 925	1889 x 1919	1900 x 1940
20 x 4 M	1940 x 398	-	-
20 x 5 M	1940 x 498	-	-
20 x 7 M	1940 x 625	1989 x 687	2000 x 710
20 x 8 M	1940 x 725	1989 x 787	2000 x 810
20 x 9 M	1940 x 825	1989 x 887	2000 x 910
20 x 10 M	1940 x 925	1989 x 987	2000 x 1010
20 x 11 M M7 + M4	1940 x 625 + 398	1989 x 1092	2000 x 1114
20 x 12 M M8 + M4	1940 x 725 + 398	1989 x 1192	2000 x 1214
20 x 13 M M9 + M4	1940 x 825 + 398	1989 x 1292	2000 x 1314
20 x 14 M M10 + M4	1940 x 925 + 398	1989 x 1392	2000 x 1414
20 x 13.1 M M7 + M7	1940 x 625 + 625	1989 x 1319	2000 x 1340
20 x 15 M M8 + M8	1940 x 725 + 725	1989 x 1519	2000 x 1540
20 x 17 M M9 + M9	1940 x 825 + 825	1989 x 1719	2000 x 1740
20 x 19 M M10 + M10	1940 x 925 + 925	1989 x 1919	2000 x 1940
20.5 x 4 M	2000 x 398	-	-
20.5 x 5 M	2000 x 498	-	-
20.5 x 7 M	2000 x 625	2049 x 687	2060 x 710
20.5 x 8 M	2000 x 725	2049 x 787	2060 x 810
20.5 x 9 M	2000 x 825	2049 x 887	2060 x 910
20.5 x 10 M	2000 x 925	2049 x 987	2060 x 1010
20.5 x 11 M M7 + M4	2000 x 625 + 398	2049 x 1092	2060 x 1114
20.5 x 12 M M8 + M4	2000 x 725 + 398	2049 x 1192	2060 x 1214
20.5 x 13 M M9 + M4	2000 x 825 + 398	2049 x 1292	2060 x 1314
20.5 x 14 M M10 + M4	2000 x 925 + 398	2049 x 1392	2060 x 1414
20.5 x 13.1 M M7 + M7	2000 x 625 + 625	2049 x 1319	2060 x 1340
20.5 x 15 M M8 + M8	2000 x 725 + 725	2049 x 1519	2060 x 1540
20.5 x 17 M M9 + M9	2000 x 825 + 825	2049 x 1719	2060 x 1740
20.5 x 19 M M10 + M10	2000 x 925 + 925	2049 x 1919	2060 x 1940
21 x 4 M	2040 x 398	-	-
21 x 5 M	2040 x 498	-	-
21 x 7 M	2040 x 625	2089 x 687	2100 x 710
21 x 8 M	2040 x 725	2089 x 787	2100 x 810
21 x 9 M	2040 x 825	2089 x 887	2100 x 910
21 x 10 M	2040 x 925	2089 x 987	2100 x 1010
21 x 11 M M7 + M4	2040 x 625 + 398	2089 x 1092	2100 x 1114
21 x 12 M M8 + M4	2040 x 725 + 398	2089 x 1192	2100 x 1214
21 x 13 M M9 + M4	2040 x 825 + 398	2089 x 1292	2100 x 1314
21 x 14 M M10 + M4	2040 x 925 + 398	2089 x 1392	2100 x 1414
21 x 13.1 M M7 + M7	2040 x 625 + 625	2089 x 1319	2100 x 1340
21 x 15 M M8 + M8	2040 x 725 + 725	2089 x 1519	2100 x 1540
21 x 17 M M9 + M9	2040 x 825 + 825	2089 x 1719	2100 x 1740
21 x 19 M M10 + M10	2040 x 925 + 925	2089 x 1919	2100 x 1940

Painted moldings for interior doors

General information	
Product name	GLAT 65, ALMUE 92
Class	unclassified
Sound transmittance	-
Weight(M21x9)	7kg from one side
Construction	HDF/MDF
Decoration	3 layers - primer, 1 layer - UV paint (Extra UV paint layer for intensive dark colors)
Standart color	NCS S0502-Y, gloss 25, eco-friendly, water based painting system
Standart fittings	Biscuits, latches to fix side and top elements, glue-silicone tube
Frames	SWE 68-147, NOR 92
Non-standart size production	Available
Decoration according NCS / RAL	Any NCS or RAL color
Other coating options	Extra bathroom coating layer for bathroom doors
Product quality warranty	5 years

Master plus production				
Min/max size	Min width	Max width	Min height	Max height
Mm (mstrGLAT)	793	2023	1842	2542
M size (mstrGLAT)	7	19	18	25
Mm (mstrALMUE)	847	2077	1869	2569
M size (mstrALMUE)	7	19	18	25

GLAT 65 moldings

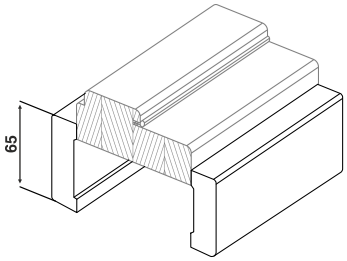

ALMUE 92 moldings

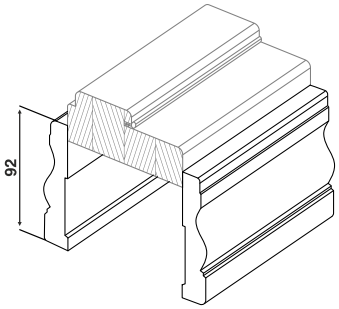

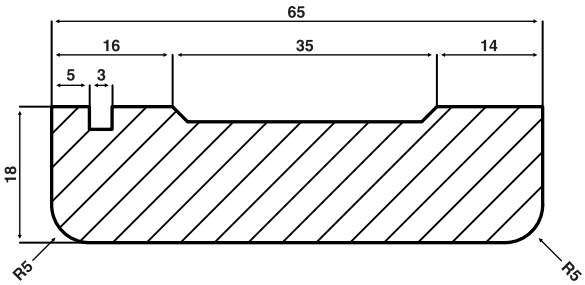

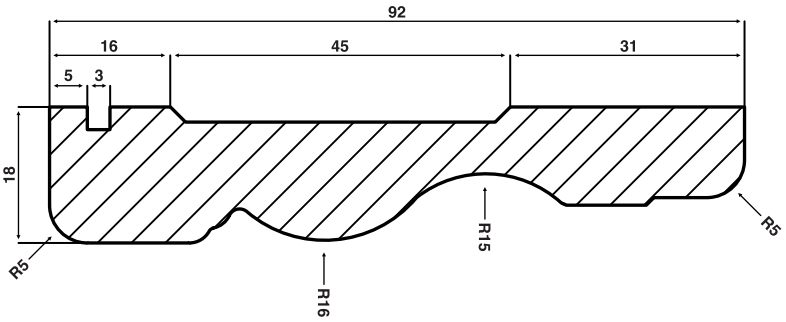

Painted flex moldings for interior doors

General information	
Product name	GLAT flex 65, ALMUE flex 92
Class	unclassified
Sound transmittance	-
Weight(M21x9)	7kg from one side
Construction	HDF/MDF
Decoration	3 layers - primer, 1 layer - UV paint (Extra UV paint layer for intensive dark colors)
Standart color	NCS S0502-Y, gloss 25, eco-friendly, water based painting system
Standart fittings	Biscuits, latches to fix side and top elements, glue-silicone tube
Frames	SWE-FLEX 75-147, NOR-FLEX 92
Non-standart size production	Available
Decoration according NCS / RAL	Any NCS or RAL color
Other coating options	Extra bathroom coating layer for bathroom doors
Product quality warranty	5 years

Master plus production				
Min/max size	Min width	Max width	Min height	Max height
Mm (mstrGLAT)	793	2023	1842	2542
M size (mstrGLAT)	7	19	18	25
Mm (mstrALMUE)	847	2077	1869	2569
M size (mstrALMUE)	7	19	18	25

GLAT flex 65 moldings

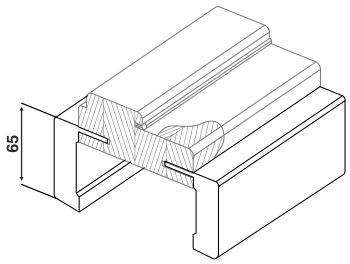

ALMUE flex 92 moldings

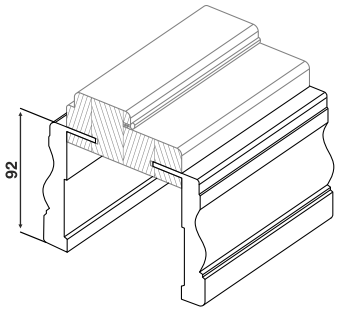

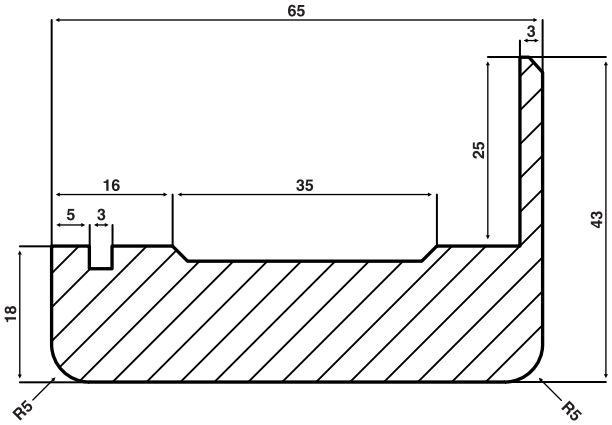

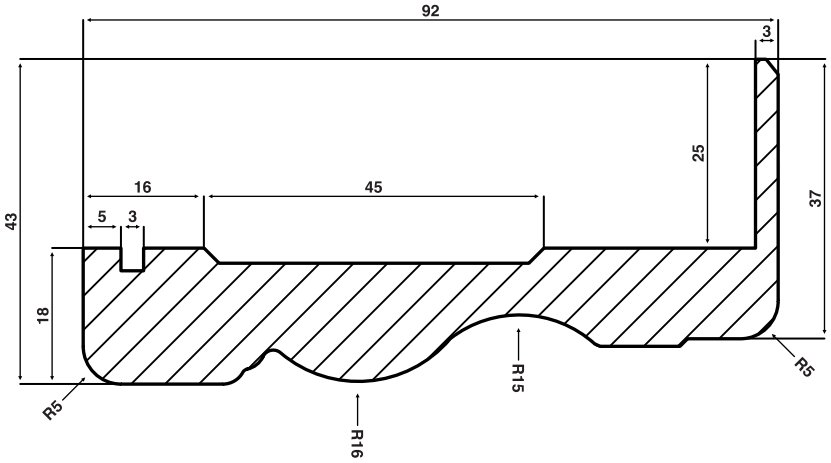

Moldings for interior doors dimensions table

Dimensions table (mm)

M Size	Moldings dimensions glat / almue		Frame outside dimensions		Door leaf dimensions	
	Height	Width	Height	Width	Height	Width
19 x 4	-	-	-	-	1840	398
19 x 5	-	-	-	-	1840	498
19 x 7	1942 /1969	793 / 847	1889	687	1840	625
19 x 8	1942 /1969	893 / 947	1889	787	1840	725
19 x 9	1942 /1969	993 / 1047	1889	887	1840	825
19 x 10	1942 /1969	1093 / 1147	1889	987	1840	925
19 x 11	1942 /1969	1196 / 1250	1889	1092	1840	625 + 398
19 x 12	1942 /1969	1296 / 1350	1889	1192	1840	725 + 398
19 x 13	1942 /1969	1396 / 1450	1889	1292	1840	825 + 398
19 x 14	1942 /1969	1496 / 1550	1889	1392	1840	925 + 398
19 x 13.1	1942 /1969	1423 / 1477	1889	1319	1840	625 + 625
19 x 15	1942 /1969	1623 / 1677	1889	1519	1840	725 + 725
19 x 17	1942 /1969	1823 / 1877	1889	1719	1840	825 + 825
19 x 19	1942 /1969	2023 / 2077	1889	1919	1840	925 + 925
20 x 4	-	-	-	-	1940	398
20 x 5	-	-	-	-	1940	498
20 x 7	2042 / 2069	793 / 847	1989	687	1940	625
20 x 8	2042 / 2069	893 / 947	1989	787	1940	725
20 x 9	2042 / 2069	993 / 1047	1989	887	1940	825
20 x 10	2042 / 2069	1093 / 1147	1989	987	1940	925
20 x 11	2042 / 2069	1196 / 1250	1989	1092	1940	625 + 398
20 x 12	2042 / 2069	1296 / 1350	1989	1192	1940	725 + 398
20 x 13	2042 / 2069	1396 / 1450	1989	1292	1940	825 + 398
20 x 14	2042 / 2069	1496 / 1550	1989	1392	1940	925 + 398
20 x 13.1	2042 / 2069	1423 / 1477	1989	1319	1940	625 + 625
20 x 15	2042 / 2069	1623 / 1677	1989	1519	1940	725 + 725
20 x 17	2042 / 2069	1823 / 1877	1989	1719	1940	825 + 825
20 x 19	2042 / 2069	2023 / 2077	1989	1919	1940	925 + 925
20.5 x 4	-	-	-	-	2000	398
20.5 x 5	-	-	-	-	2000	498
20.5 x 7	2102 / 2129	793 / 847	2049	687	2000	625
20.5 x 8	2102 / 2129	893 / 947	2049	787	2000	725
20.5 x 9	2102 / 2129	993 / 1047	2049	887	2000	825
20.5 x 10	2102 / 2129	1093 / 1147	2049	987	2000	925
20.5 x 11	2102 / 2129	1196 / 1250	2049	1092	2000	625 + 398
20.5 x 12	2102 / 2129	1296 / 1350	2049	1192	2000	725 + 398
20.5 x 13	2102 / 2129	1396 / 1450	2049	1292	2000	825 + 398
20.5 x 14	2102 / 2129	1496 / 1550	2049	1392	2000	925 + 398
20.5 x 13.1	2102 / 2129	1423 / 1477	2049	1319	2000	625 + 625
20.5 x 15	2102 / 2129	1623 / 1677	2049	1519	2000	725 + 725
20.5 x 17	2102 / 2129	1823 / 1877	2049	1719	2000	825 + 825
20.5 x 19	2102 / 2129	2023 / 2077	2049	1919	2000	925 + 925
21 x 4	-	-	-	-	2040	398
21 x 5	-	-	-	-	2040	498
21 x 7	2142 / 2169	793 / 847	2089	687	2040	625
21 x 8	2142 / 2169	893 / 947	2089	787	2040	725
21 x 9	2142 / 2169	993 / 1047	2089	887	2040	825
21 x 10	2142 / 2169	1093 / 1147	2089	987	2040	925
21 x 11	2142 / 2169	1196 / 1250	2089	1092	2040	625 + 398
21 x 12	2142 / 2169	1296 / 1350	2089	1192	2040	725 + 398
21 x 13	2142 / 2169	1396 / 1450	2089	1292	2040	825 + 398
21 x 14	2142 / 2169	1496 / 1550	2089	1392	2040	925 + 398
21 x 13.1	2142 / 2169	1423 / 1477	2089	1319	2040	625 + 625
21 x 15	2142 / 2169	1623 / 1677	2089	1519	2040	725 + 725
21 x 17	2142 / 2169	1823 / 1877	2089	1719	2040	825 + 825
21 x 19	2142 / 2169	2023 / 2077	2089	1919	2040	925 + 925

Natural plywood, exterior door

General information	
Product name	optUDHUSDØR, optUDHUSDØR glass, optUDHUSDØR GLAT, optUDHUSDØR GLAT glass, optUDHUSDØR ECO, optUDHUSDØR ECO glass
Door type	Product of plywood natural surface for externally use. Outside and inside opening.
Thermal transmittance	Supports 15°C building heat between outdoor and indoor.
Door thickness size	40mm
Sound transmittance	13dB
Weight (M21x9)	Door leaf (filling) ~ 20kg / Door leaf (glass) ~ 21kg Frame NOR92 - 10kg
Glass	Transparent, 2 chamber glass pack 12mm
Glass list	Pine wood
Decoration	Untreated plywood
Frame profile	NOR92x42
Thresholds	NOR92x42 pine wood
Lock	ASSA565
Cylinder	Additional accessories
Hinges	3248 - 2 units
Sealing strip	Silicone-based white
Lock plate, frame side	0034 ZN (DL 3257)
Non-standard size production	Available at master plus
Decoration according NCS / RAL	Available at master plus
Other accessories options	Available at master plus
Units per pallet	11 pcs. A pallet consist one model and one size product
Product quality warranty	3 years factory guarantee

Master plus production				
Min/max size	Min width	Max width	Min height	Max height
mm	160	925	160	2440
M size	2.35	10	2.35	25
Lock	DORMA 9192; ASSA 8765; ASSA 2002; ASSA M5001 FIX; ASSA 2025 FIX; Yale Dorman V2N			
Cylinder	TrioVing 1285C; Dorma 4602; Scan701CR - 18mm			
Hinges	3248 - 3 units; 3248 - 4 units; hidden hinges SIMONS TECTUS - 2 units standard, for additional selection 3 and 4 units			
Sealing strip	Silicone-brown (always included for dark colors)			
Lock plate, frame side	Depend on selected lock cases			
Other glazing options	Matt, costwold			

Profile structure

1. Finger joined pine wood frame
2. Wood cap
3. Polystyrene core
4. Glass package, double glass
5. Wood glass list
6. Plywood panels surface 4mm
7. Wood
8. Threshold

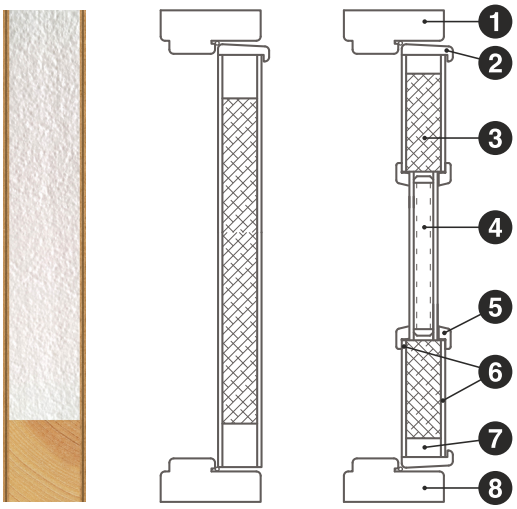

Available designs

optUDHUSDØR

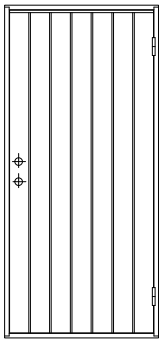

optUDHUSDØR D dobbelt fixed

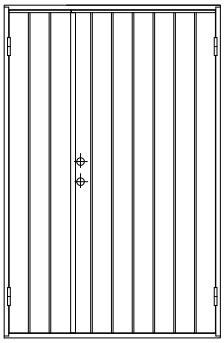

optUDHUSDØR D dobbelt

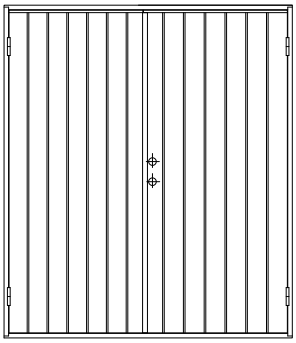

optUDHUSDØR glass

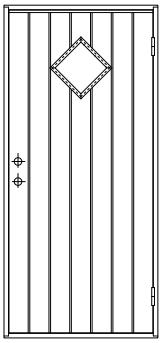

optUDHUSDØR D glass dobbelt fixed

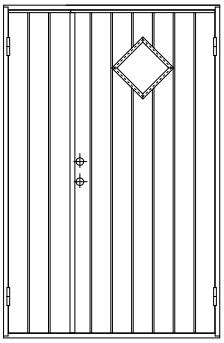

optUDHUSDØR D glass dobbelt

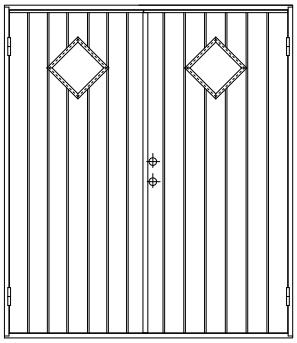

optUDHUSDØR GLAT

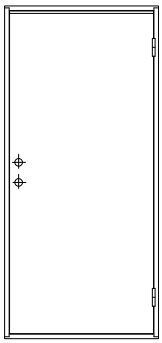

optUDHUSDØR GLAT D dobbelt fixed

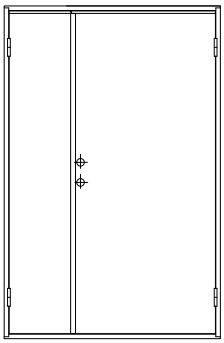

optUDHUSDØR GLAT D dobbelt

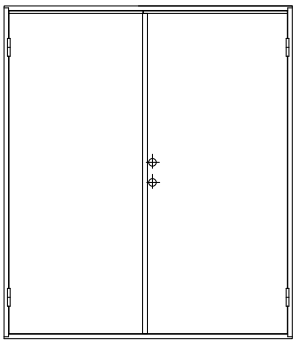

optUDHUSDØR GLAT glass

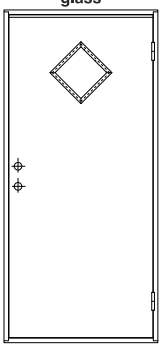

optUDHUSDØR GLAT D glass dobbelt fixed

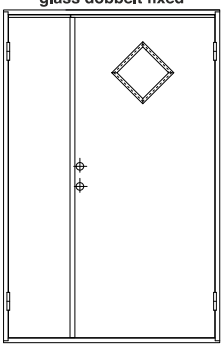

optUDHUSDØR GLAT D glass dobbelt

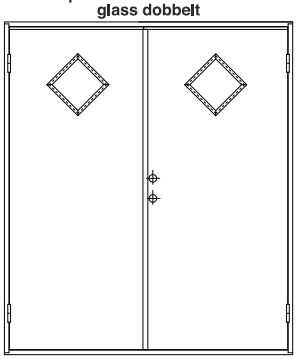

optUDHUSDØR ECO

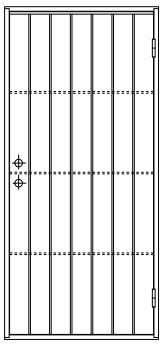

optUDHUSDØR ECO D dobbelt fixed

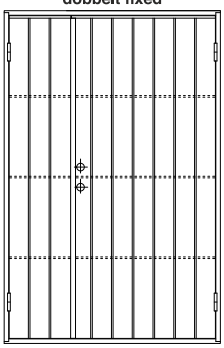

optUDHUSDØR ECO D dobbelt

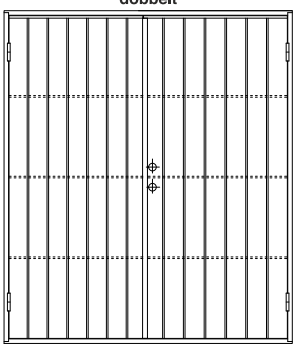

optUDHUSDØR ECO glass

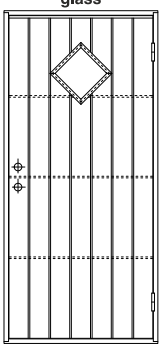

optUDHUSDØR ECO D glass dobbelt fixed

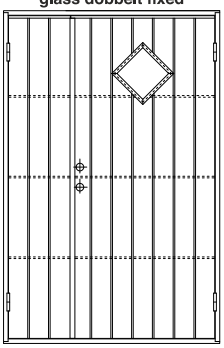

optUDHUSDØR ECO D glass dobbelt

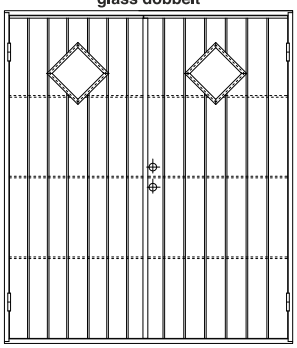

Frames for exterior doors

General information	
Product name	40x92 SWE, 40x92 SWE-NOR frame set
Class	unclassified
Weight (M9)	~14kg
Construction	Finger joointed pine wood
Decoration	Natural pine surface
Standard color	-
Standart fittings	-
Lock plate	0034
Thresholds	40x92 SWE, 40x92 SWE-NOR
Non-standart size production	Available at master plus
Decoration according NCS / RAL	Available at master plus
Product quality warranty	3 years

40x92 SWE

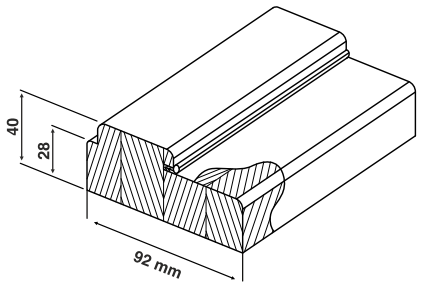

40x92 SWE-NOR

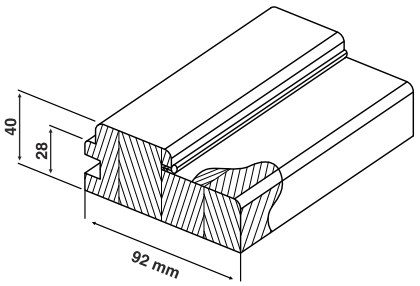

40x92 SWE, 40x92 SWE-NOR frame - top

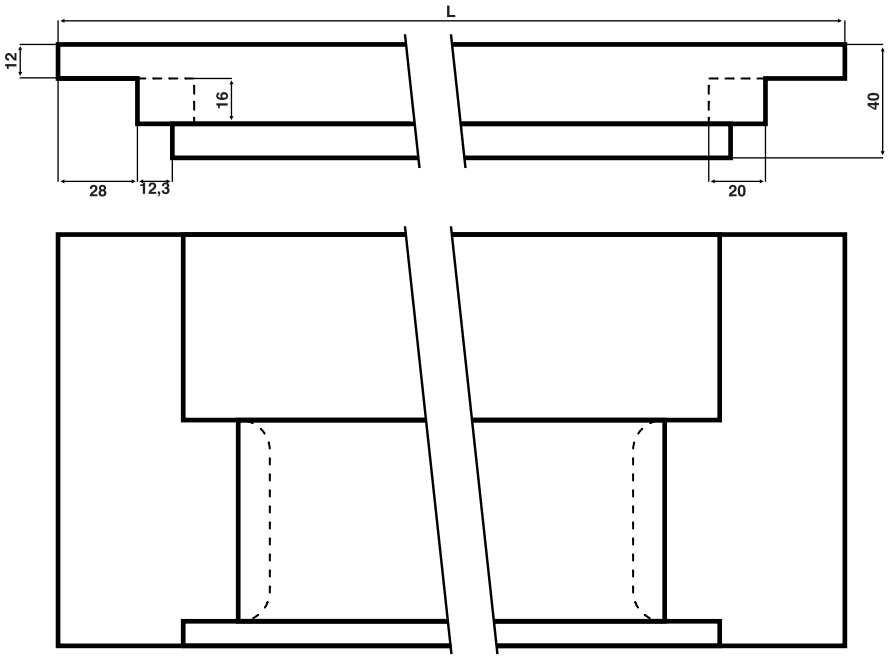

FRAME GASKET
Code: S104/4

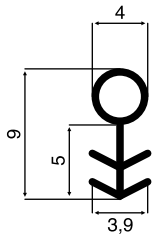

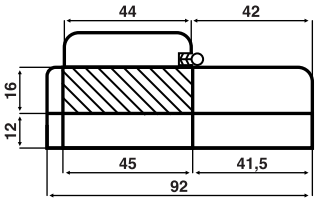

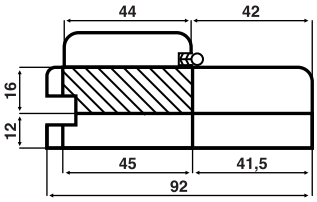

	M8	M9	M10	M13	M14	M15	M13.9	M14.9	M17	M19
Door leaf width	725	825	925	661+561	711+611	761+661	925+409	925+509	825+825	925+925
L - top length	786	886	986	1286	1386	1486	1398	1498	1714	1914

Danish market	M9.1	M9.7	M10.1
Door leaf width	827	887	927
L - top length	888	948	988

40x92 SWE, 40x92 SWE-NOR frame - sides

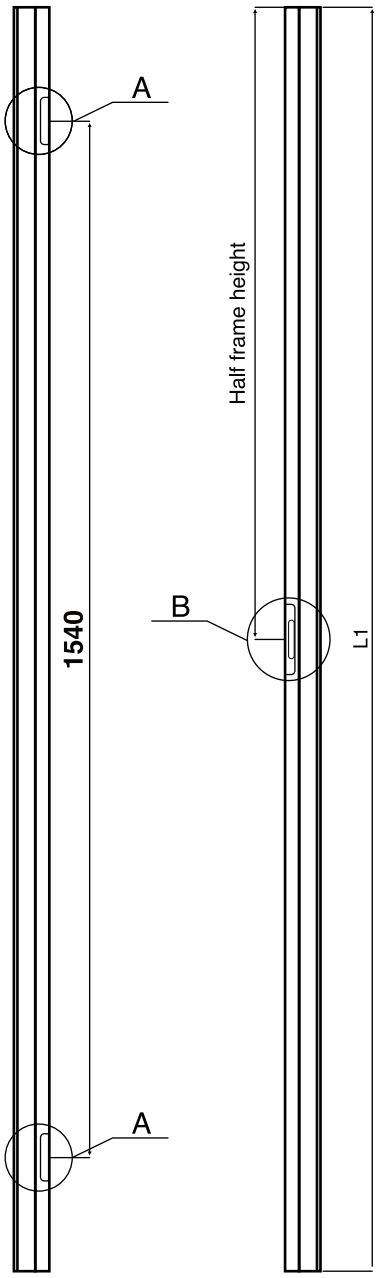

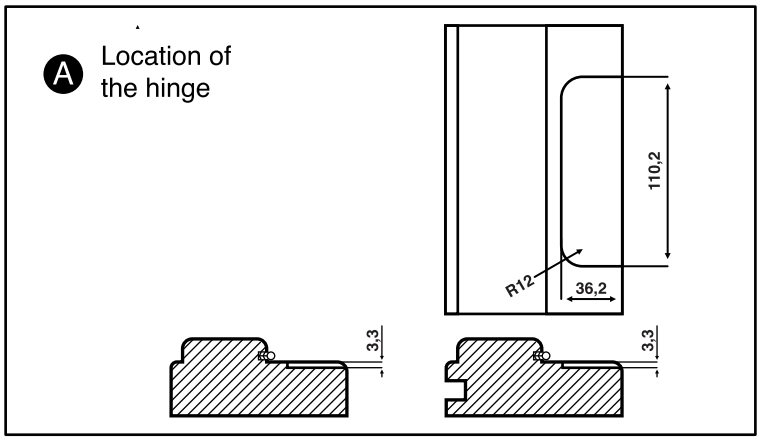

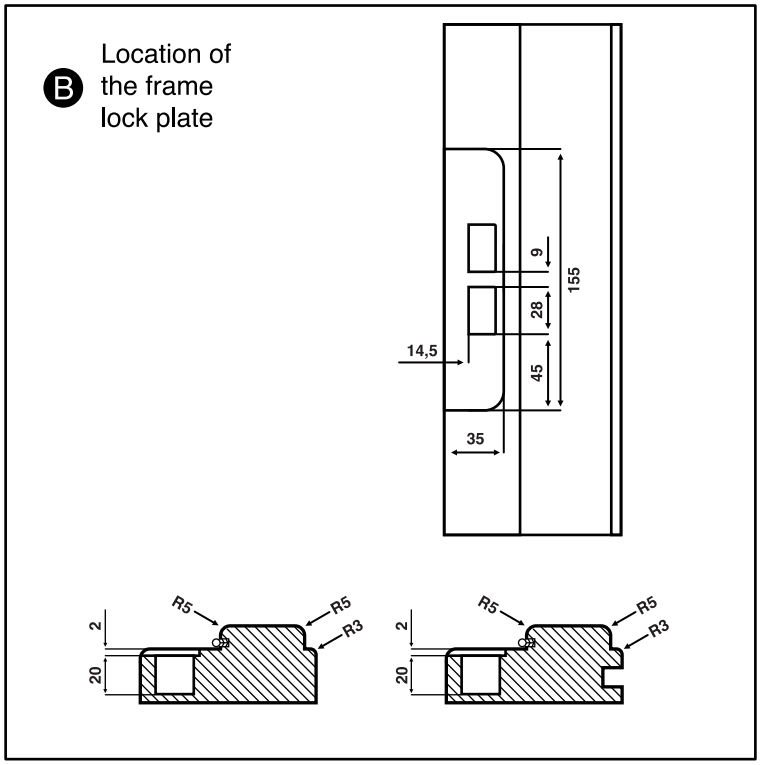

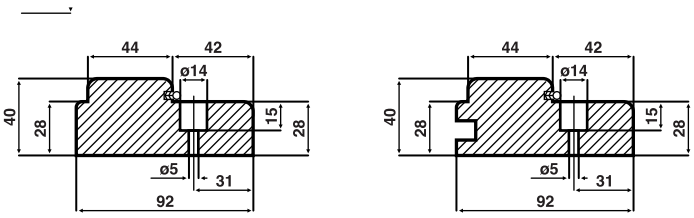

	M19	M20	M21
Door leaf height	1827	1927	2027
L1 - frame (side) height	1865	1965	2065
L2 - Gap to lock plate	855	905	955

Danish market	M19.1	M20.1	M20.8	M21.1	M21.45
Door leaf width	1816	1916	1988	2018	2053
L1 - frame (side) height	1854	1954	2026	2056	2091
L2 - Gap to lock plate	850.5	899.5	935.5	950.5	968

FRAME GASKET

Code: S104/4

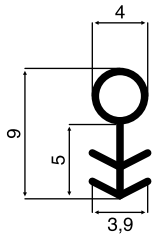

Thresholds for exterior doors 40x92SWE, 40x92 SWE-NOR

General information	
Product name	40x92 SWE, 40x92 SWE-NOR
Class	unclassified
Sound transmittance	-
Weight (M9)	~2kg
Construction	Finger joointed pine wood (see construction drawings for more detailed information).
Decoration	Natural pine surface
Standart fittings	-
Frame	40x92 SWE, 40x92 SWE-NOR
Non-standart size production	Available at master plus
Decoration according NCS / RAL	Available at master plus
Other glazing options	-
Product quality warranty	3 years

40x92 SWE

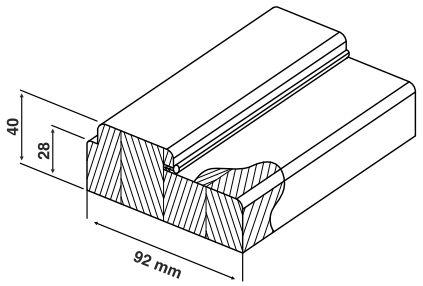

40x92 SWE-NOR

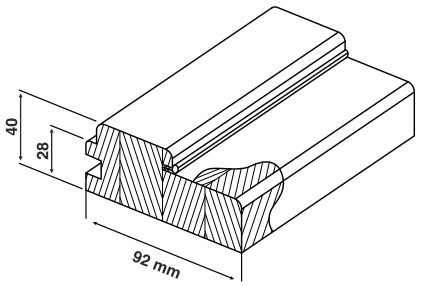

40x92 SWE, 40x92 SWE-NOR exterior thresholds

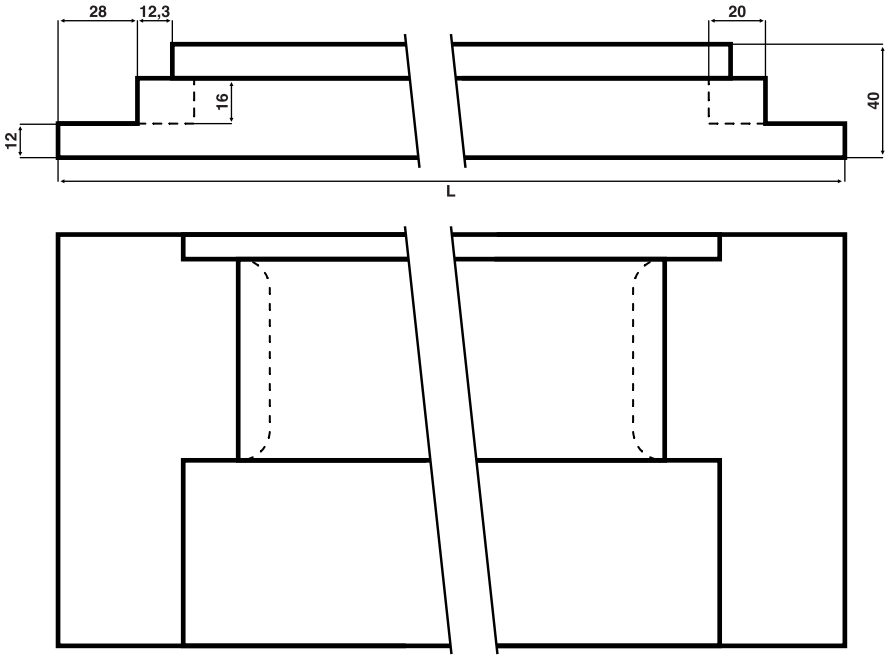

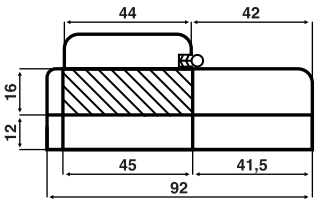

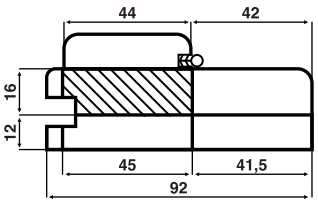

	M8	M9	M10	M13	M14	M15	M13.9	M14.9	M17	M19
Door leaf width	725	825	925	661+561	711+611	761+661	925+409	925+509	825+825	925+925
L - top length	786	886	986	1286	1386	1486	1398	1498	1714	1914

Danish market	M9.1	M9.7	M10.1
Door leaf width	827	887	927
L - top length	888	948	988

Gaps between door leaf and frame for single doors

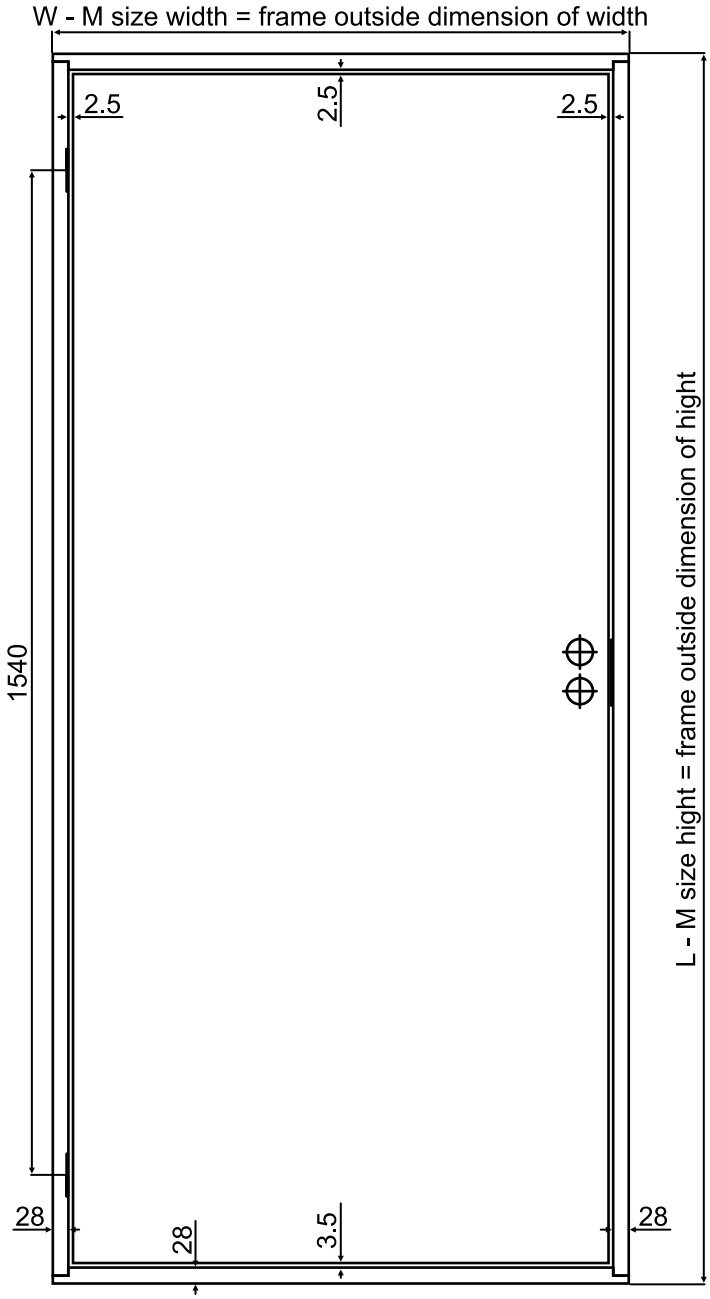

M size	L	W
19 x 8	1889	786
19 x 9	1889	886
19 x 10	1889	986
20 x 8	1989	786
20 x 9	1989	886
20 x 10	1989	986
21 x 8	2089	786
21 x 9	2089	886
21 x 10	2089	986

Danish market

M size	L	W
19.1 x 9.1	1878	888
19.1 x 9.7	1878	948
20.1 x 9.1	1978	888
20.1 x 9.7	1978	948
20.8 x 9.1	2050	888
20.8 x 9.7	2050	948
20.8 x 10.1	2050	988
21.1 x 9.1	2080	888
21.1 x 9.1	2080	948
21.45 x 9.1	2115	888
21.45 x 9.7	2115	948
21.45 x 10.1	2115	988

Gaps between door leaf and frame for double doors

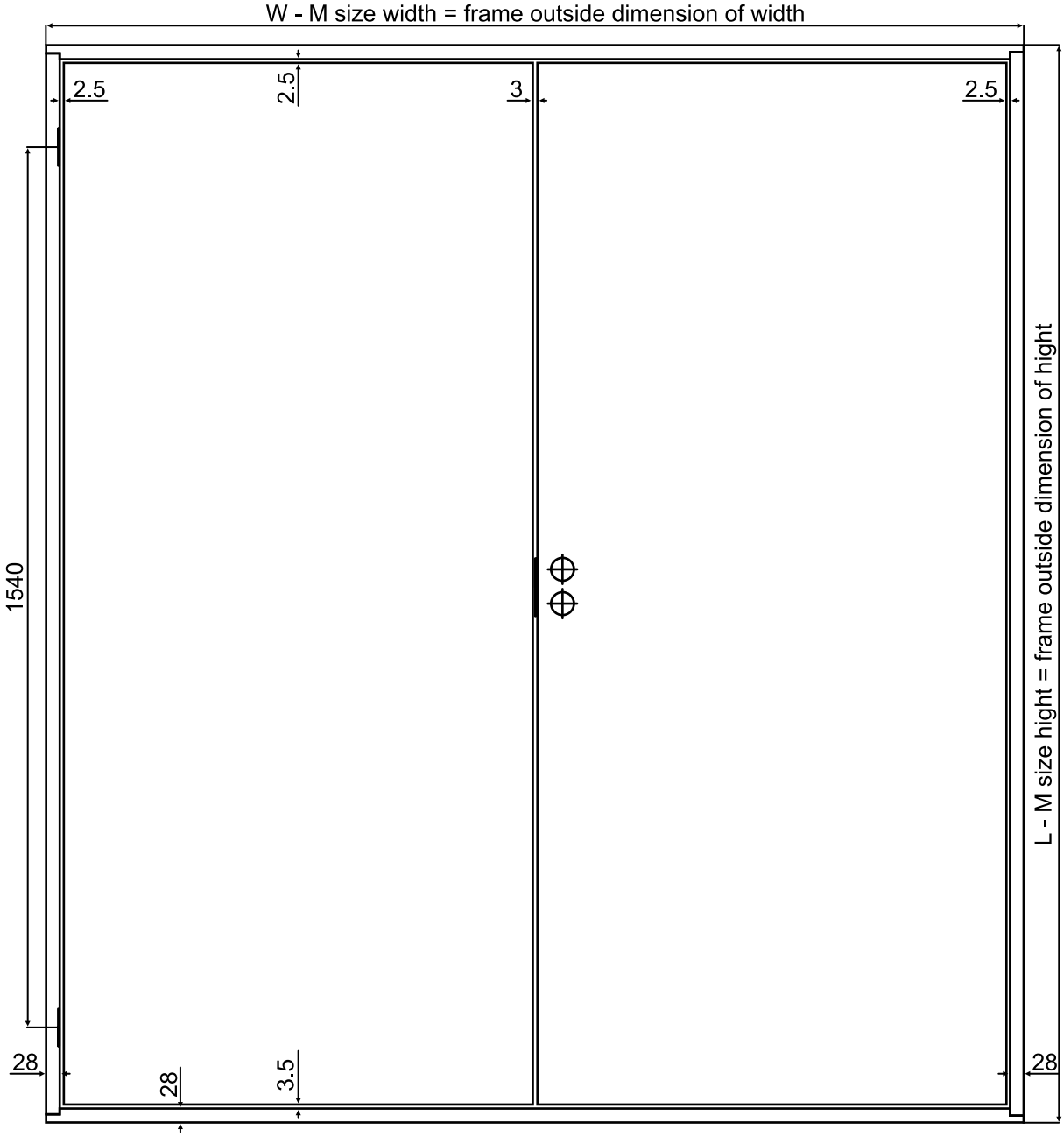

M size	L	W
19 x 13	1889	1286
19 x 14	1889	1386
19 x 15	1889	1486
19 x 13.9	1889	1398
19 x 14.9	1889	1498
19 x 17	1889	1714
19 x 19	1889	1914
20 x 13	1989	1286
20 x 14	1989	1386
20 x 15	1989	1486
20 x 13.9	1989	1398
20 x 14.9	1989	1498
20 x 17	1989	1714
20 x 19	1989	1914

M size	L	W
21 x 13	2089	1286
21 x 14	2089	1386
21 x 15	2089	1486
21 x 13.9	2089	1398
21 x 14.9	2089	1498
21 x 17	2089	1714
21 x 19	2089	1914

Natural plywood, exterior doors dimensions table

Natural plywood, single door dimensions table (mm)

M Size	Door leaf size	Frame outside dimension	Door way
19 x 8 M	1827 x 725	1889 x 786	1900 x 800
19 x 9 M	1827 x 825	1889 x 886	1900 x 900
19 x 10 M	1827 x 925	1889 x 986	1900 x 1000
20 x 8 M	1927 x 725	1989 x 786	2000 x 800
20 x 9 M	1927 x 825	1989 x 886	2000 x 900
20 x 10 M	1927 x 925	1989 x 986	2000 x 1000
21 x 8 M	2027 x 725	2089 x 786	2100 x 800
21 x 9 M	2027 x 825	2089 x 886	2100 x 900
21 x 10 M	2027 x 925	2089 x 986	2100 x 1000

Natural plywood, double door dimensions table (mm)

M Size	Door leaf size	Frame outside dimension	Door way
19 x 13 M	1827 x 661/561f	1889 x 1286	1900 x 1300
19 x 14 M	1827 x 711/611f	1889 x 1386	1900 x 1400
19 x 15 M	1827 x 761/661f	1889 x 1486	1900 x 1500
19 x 13.9 M	1827 x 925/409f	1889 x 1398	1900 x 1412
19 x 14.9 M	1827 x 925/509f	1889 x 1498	1900 x 1512
19 x 17 M	1827 x 825/825f	1889 x 1714	1900 x 1728
19 x 19 M	1827 x 925/925f	1889 x 1914	1900 x 1928
20 x 13 M	1927 x 661/561f	1989 x 1286	2000 x 1300
20 x 14 M	1927 x 711/611f	1989 x 1386	2000 x 1400
20 x 15 M	1927 x 761/661f	1989 x 1486	2000 x 1500
20 x 13.9 M	1927 x 925/409f	1989 x 1398	2000 x 1412
20 x 14.9 M	1927 x 925/509f	1989 x 1498	2000 x 1512
20 x 17 M	1927 x 825/825f	1989 x 1714	2000 x 1728
20 x 19 M	1927 x 925/925f	1989 x 1914	2000 x 1928
21 x 13 M	2027 x 661/561f	2089 x 1286	2100 x 1300
21 x 14 M	2027 x 711/611f	2089 x 1386	2100 x 1400
21 x 15 M	2027 x 761/661f	2089 x 1486	2100 x 1500
21 x 13.9 M	2027 x 925/409f	2089 x 1398	2100 x 1412
21 x 14.9 M	2027 x 925/509f	2089 x 1498	2100 x 1512
21 x 17 M	2027 x 825/825f	2089 x 1714	2100 x 1728
21 x 19 M	2027 x 925/925f	2089 x 1914	2100 x 1928

Danish market, natural plywood, single door dimensions table (mm)

M Size	Door leaf size	Frame outside dimension	Door way
19.1 x 9.1 M	1816 x 827	1878 x 888	1890 x 900
19.1 x 9.7 M	1816 x 887	1878 x 948	1890 x 960
20.1 x 9.1 M	1916 x 827	1978 x 888	1990 x 900
20.1 x 9.7 M	1916 x 887	1978 x 948	1990 x 960
20.8 x 9.1 M	1988 x 827	2050 x 888	2060 x 900
20.8 x 9.7 M	1988 x 887	2050 x 948	2060 x 960
20.8 x 10.1 M	1988 x 927	2050 x 988	2060 x 1000
21.1 x 9.1 M	2018 x 827	2080 x 888	2090 x 900
21.1 x 9.7 M	2018 x 887	2080 x 948	2090 x 960
21.45 x 9.1 M	2053 x 827	2115 x 888	2125 x 900
21.45 x 9.7 M	2053 x 887	2115 x 948	2125 x 960
21.45 x 10.1 M	2053 x 927	2115 x 988	2125 x 1000

Dimensions of outside frame indicated with 42x92NOR profile frame and threshold

Painted, exterior doors

General information	
Product name	Opt-0, opt-1
Door type	Doors for use externally in houses and apartments
Thermal transmittance	U=0,91 W/m2K panel doors
Door thickness size	62mm
Sound transmittance	31dB
Weight (M21x10)	Door leaf ~ 22kg / Door leaf (glass) ~ 27kg Frame FIN105x42 - 14kg
Glass	-
Glass list	-
Decoration	1 layer - impregnation, 1 layer - primmer, 1 layer - paint
Standard color	NCS S0502- Y, gloss 25
Frame profile	105x42, 115x42, 105x42 NOR, 115x42NOR
Thresholds	Hardwood impregnated 105x26, 115x26
Lock	ASSA565
Cylinder	Additional accessories
Hinges	3248 - 2 units
Sealing strip	Silicone-based white
Lock plate, frame side	0034 ZN (DL 3257)
Non-standard size production	Available at master plus
Decoration according NCS / RAL	Available at optimal plus
Units per pallet	Frame 42x105 - 9 pcs. A pallet consist one model and one size to all products Frame 42x115 - 7 pcs. A pallet consist one model and one size to all products
Product quality warranty	5 years factory guarantee, 7 years door blade form

Profile structure

1. Finger joined pine wood frame
2. Aluminium panels
3. Polystyrene core
4. HDF panels surface, 3mm
5. Wood
6. Threshold

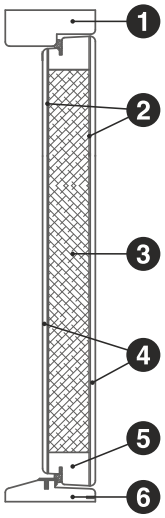

Available designs

opt-0

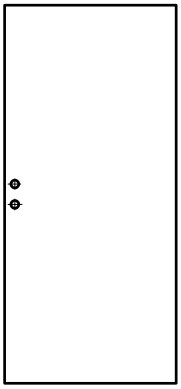

opt-1

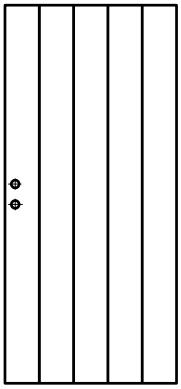

opt-SL-G0
glass

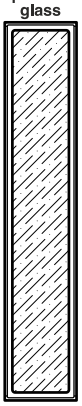

Frames for exterior doors

General information	
Product name	42x105, 42x115, 42x105NOR, 42x115NOR frame set
Class	unclassified
Weight (M9)	~14kg
Construction	Finger jointed wood
Decoration	1 layer - impregnation, 1 layer - primmer, 1 layer - paint
Standard color	NCS S0502-Y, gloss 25
Standart fittings	-
Lock plate	0034
Thresholds	26x105, 26x115, 26x105 hybrid, 26x115 hybrid
Non-standart size production	Available at master plus
Decoration according NCS / RAL	Available at master plus
Product quality warranty	5 years

42x105

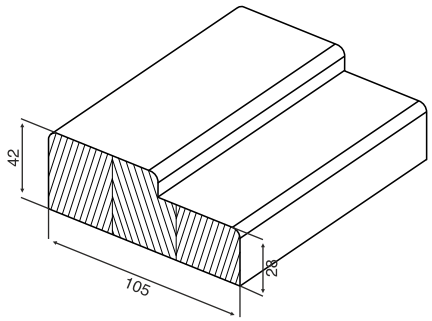

42x105NOR

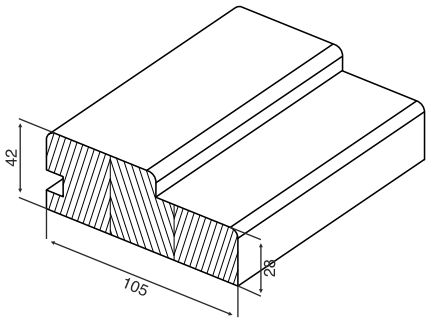

42x115

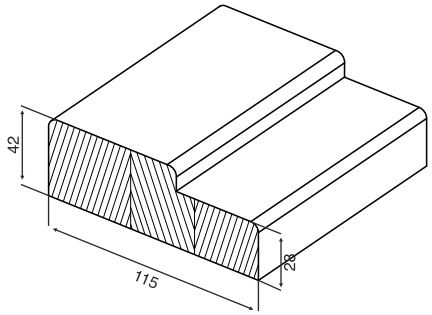

42x115NOR

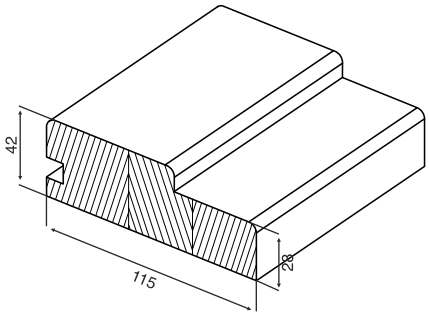

42x105, 42x115, 42x105NOR, 42x115NOR frame - top

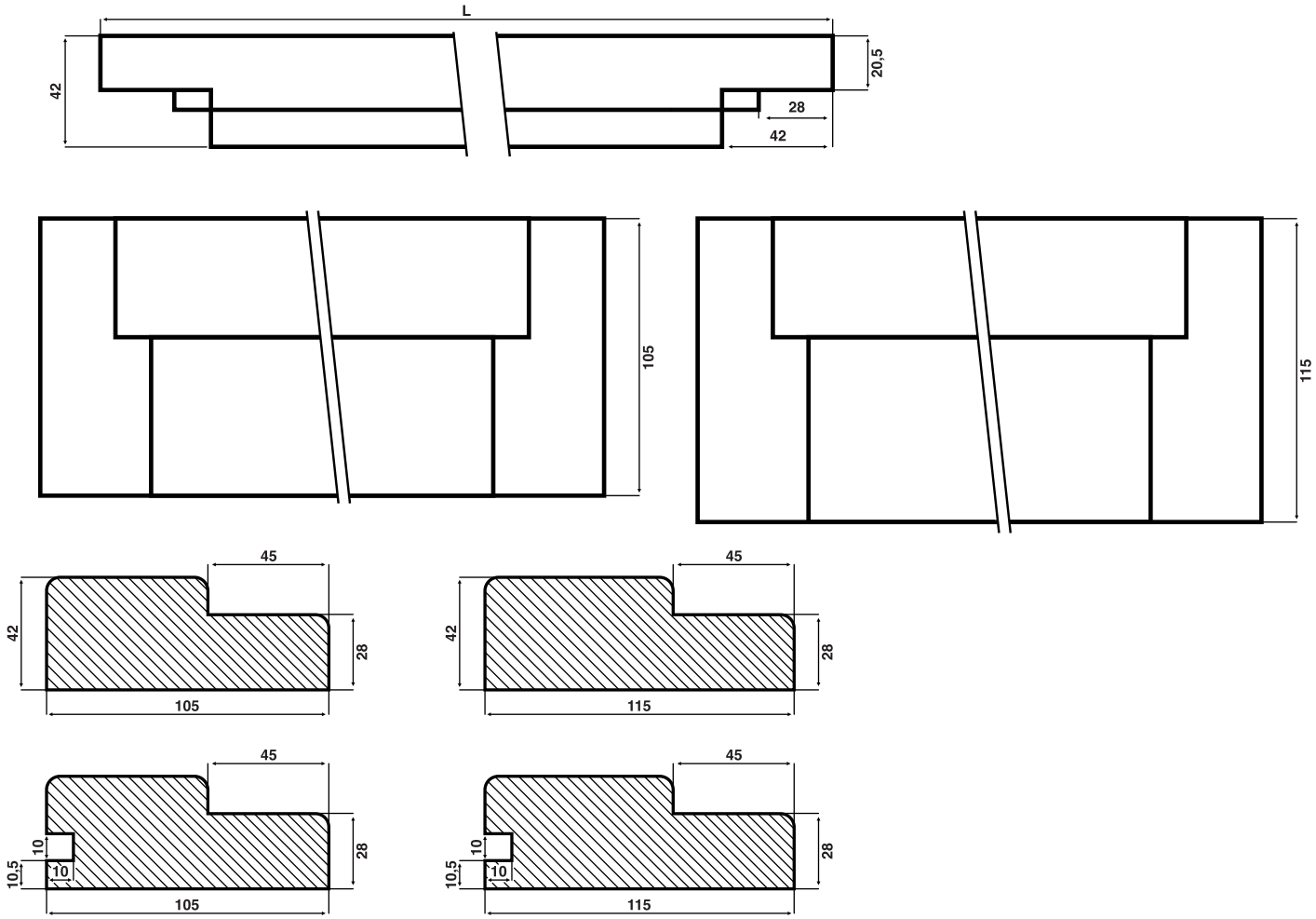

	M8	M9	M10	M13	M14	M15	M13.9	M14.9	M17	M19
Door leaf width	725	825	925	661+561	711+611	761+661	925+409	925+509	825+825	925+925
L - top length	786	886	986	1286	1386	1486	1398	1498	1714	1914

Danish market	M9.1	M9.7	M10.1
Door leaf width	827	887	927
L - top length	888	948	988

42x105, 42x115, 42x105NOR, 42x115NOR frame - sides

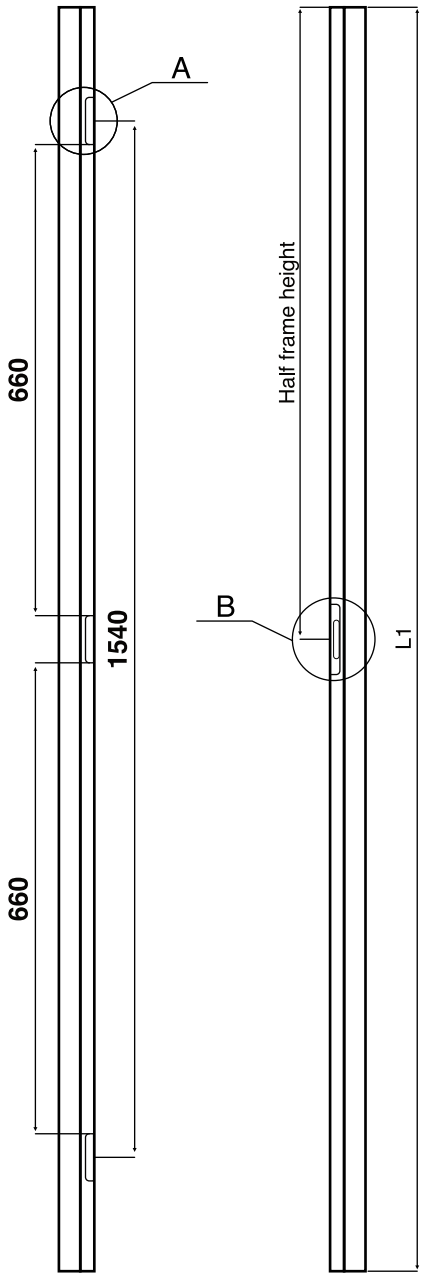

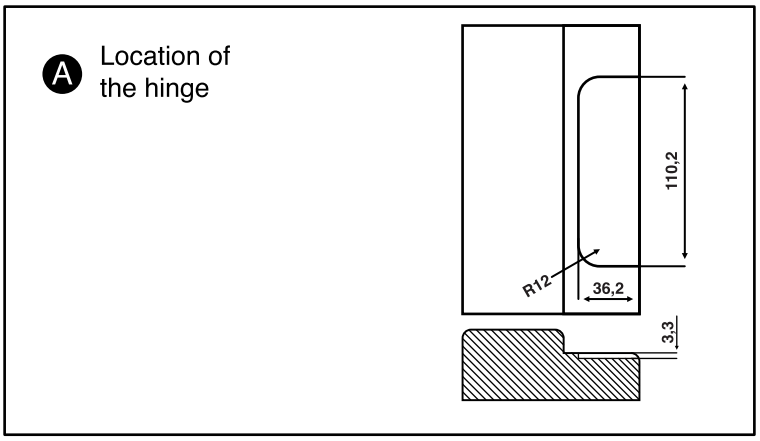

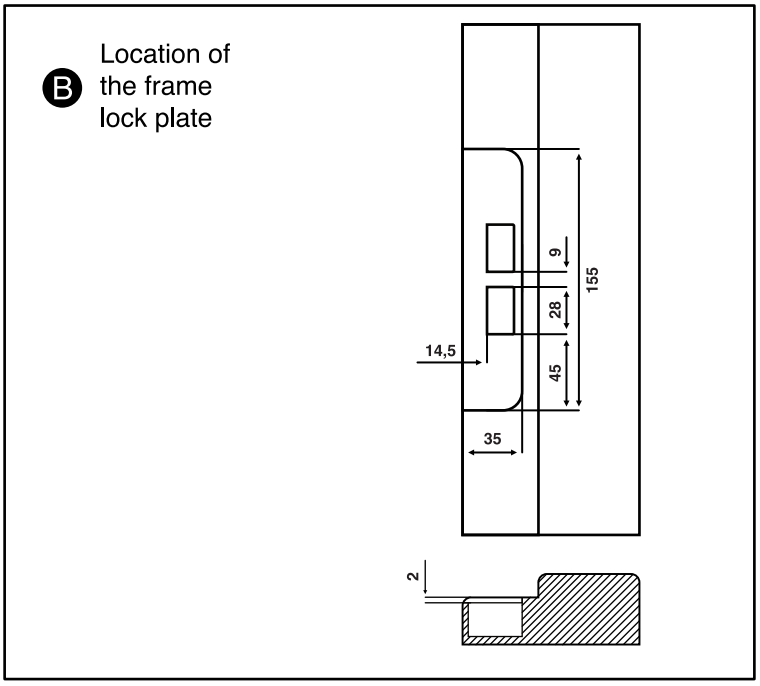

	M19	M20	M21
Door leaf height	1840	1940	2040
L1 - frame (side) height	1860	1960	2060
L2 - Gap to lock plate	852.5	902.5	952.5

Danish market	M19.1	M20.1	M20.8	M21.1	M21.45
Door leaf width	1832	1932	2002	2032	2067
L1 - frame (side) height	1851	1951	2021	2051	2086
L2 - Gap to lock plate	848	898	933	948	965.5

42x105/115 vinkel, 42x105/115NOR vinkel frame - sides

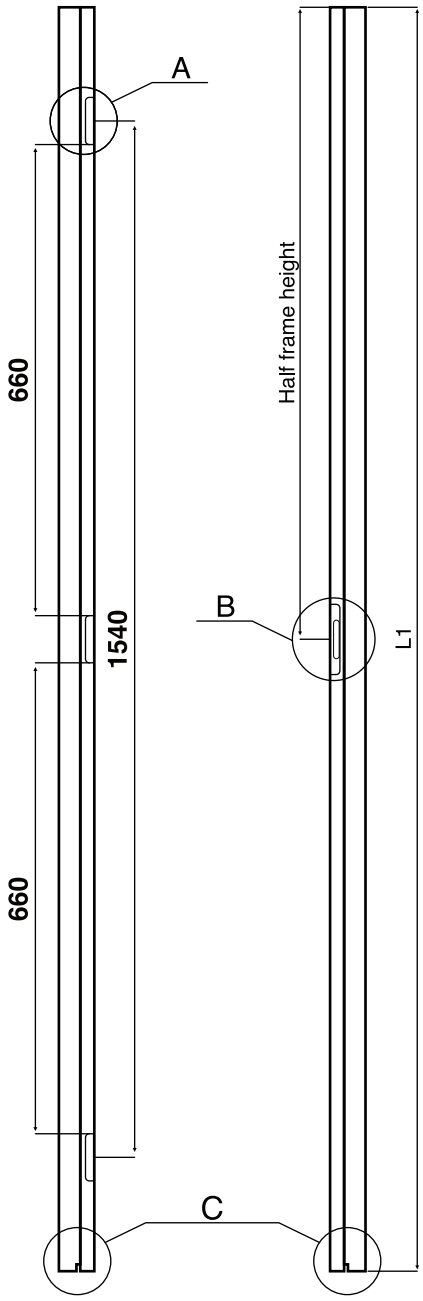

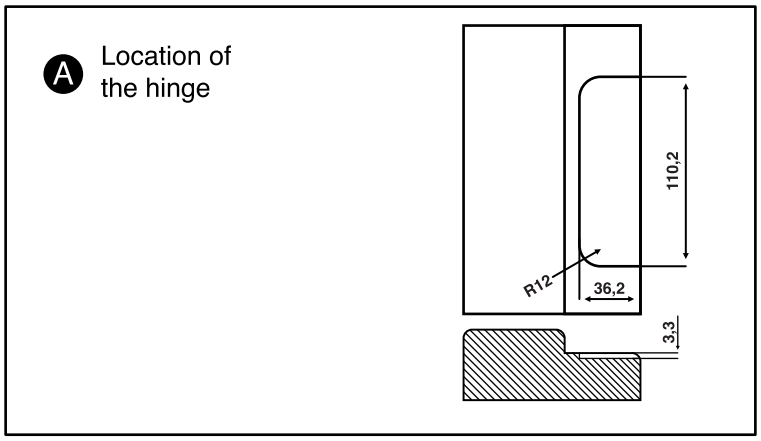

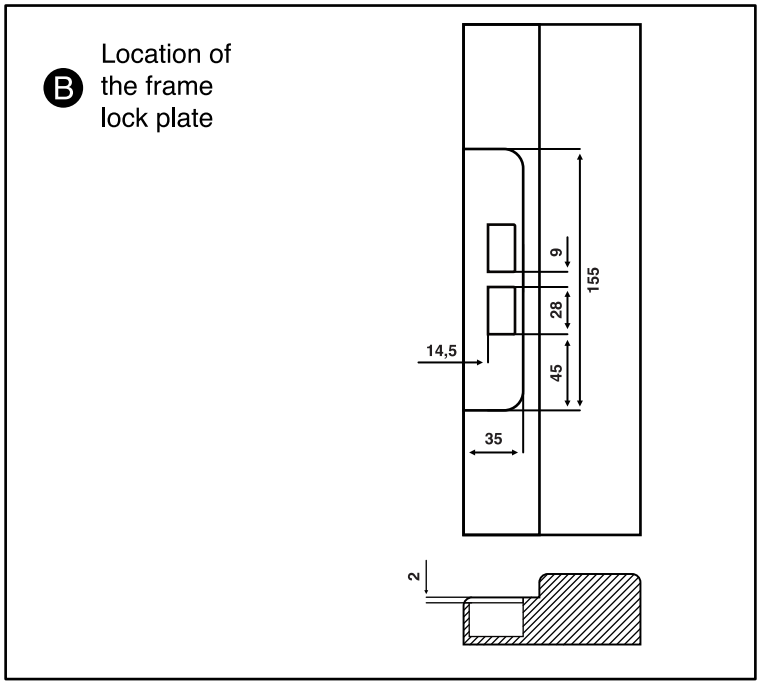

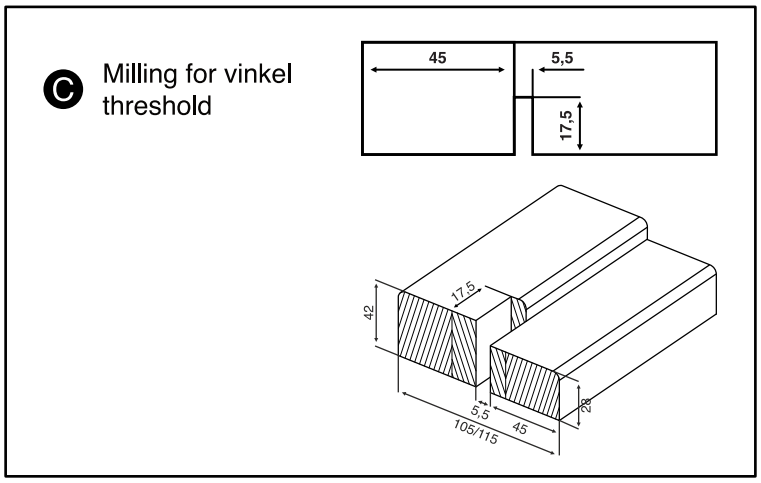

	M19	M20	M21
Door leaf height	1840	1940	2040
L1 - frame (side) height	1860	1960	2060
L2 - Gap to lock plate	852.5	902.5	952.5

Danish market	M19.1	M20.1	M20.8	M21.1	M21.45
Door leaf width	1832	1932	2002	2032	2067
L1 - frame (side) height	1851	1951	2021	2051	2086
L2 - Gap to lock plate	848	898	933	948	965.5

Thresholds for exterior doors

General information	
Product name	26x105, 26x115
Class	unclassified
Sound transmittance	-
Weight (M9)	~1kg
Construction	Finger joointed hardwood (see construction drawings for more detailed information).
Decoration	Transparent lacquering, 2 layers of lacquer
Standart fittings	-
Frame	42x105, 42x115, 42x105NOR, 42x115NOR
Non-standart size production	Available at master plus
Decoration according NCS / RAL	-
Product quality warranty	5 years

26x105/115 BG

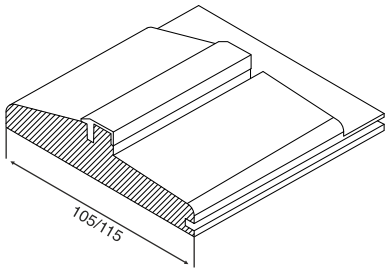

26x105/115 FG-BG

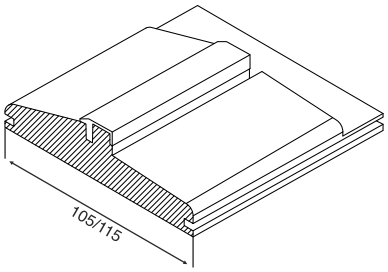

26x105/115 FG

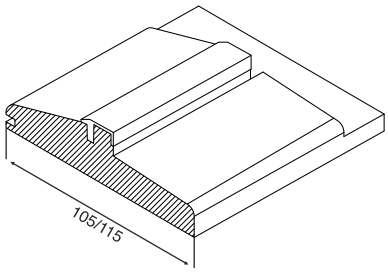

26x105/115

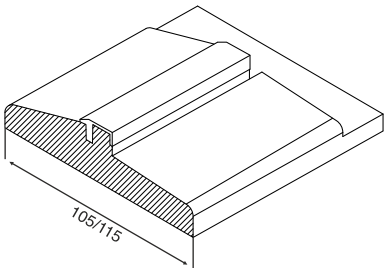

26x105, 26x115 exterior thresholds

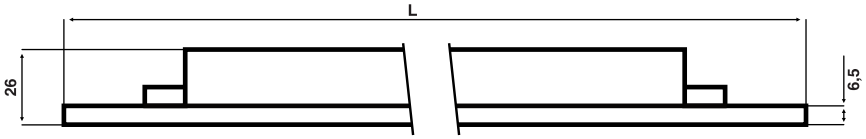

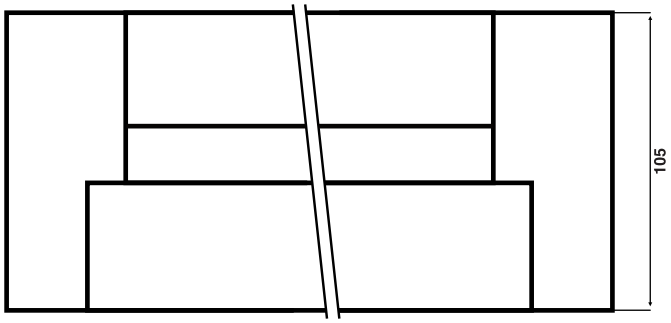

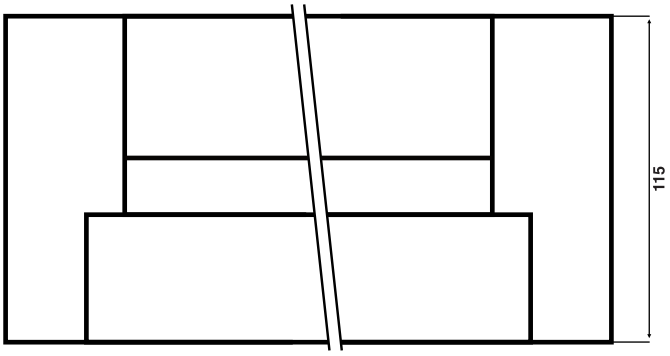

	M8	M9	M10	M13	M14	M15	M13.9	M14.9	M17	M19
Door leaf width	725	825	925	661+561	711+611	761+661	925+409	925+509	825+825	925+925
L - top length	786	886	986	1286	1386	1486	1398	1498	1714	1914

Danish market	M9.1	M9.7	M10.1
Door leaf width	827	887	927
L - top length	888	948	988

Painted, exterior doors

General information	
Product name	Opt-0, opt-1, optG-6 glass, optG-10 glass
Door type	Doors for use externally in houses and apartments
Thermal transmittance	U=0,91 W/m2K panel doors / U=1,2 W/m2K glass doors
Door thickness size	62mm
Sound transmittance	31dB
Weight (M21x10)	Door leaf ~ 22kg / Door leaf (glass) ~ 27kg Frame 105x42 - 14kg
Glass	Transparent, 2 chamber glass pack 12mm
Glass list	100 % waterproof, PVC plastic material
Decoration	1 layer - impregnation, 2 layers - primmer, 1 layer - paint
Standard color	NCS S0502- Y, gloss 25
Frame profile	105x42, 115x42, 105x42NOR, 115x42NOR
Thresholds	Hardwood impregnated 105x26, 115x26
Lock	ASSA565
Cylinder	Additional accessories
Hinges	3248 - 2 units
Sealing strip	Silicone-based white
Lock plate, frame side	0034 ZN (DL 3257)
Non-standard size production	Available
Decoration according NCS / RAL	Any NCS or RAL color
Units per pallet	A pallet can consist different models, sizes and quantities according to PO number
Product quality warranty	7 years factory guarantee, 10 years door blade form

Master plus production				
Min/max size	Min width	Max width	Min height	Max height
mm	160	925	160	2440
M size	2.35	10	2.35	25
Threshold	Hybrid (wood + aluminum) for any frames profiles			
Lock	DORMA 9192; ASSA 8765; ASSA 2002; ASSA M5001 FIX; ASSA 2025 FIX; Yale Dorman V2N			
Cylinder	TrioVing 1285C; Dorma 4602; Scan701CR - 18mm			
Hinges	3248 - 3 units; 3248 - 4 units; hidden hinges SIMONS TECTUS -2 units standard, for additional selection 3 and 4 units			
Sealing strip	Silicone-brown (always included for dark colors)			
Lock plate, frame side	Depend on selected lock cases			
Other glazing options	Matt, costwold			

Profile structure

1. Finger joined pine wood frame
2. Aluminium panels
3. Polystyrene core
4. Rubber seals
5. Glass pacckage, double glass
6. PVC plastic glass list
7. HDF panels surface, 3mm
8. Wood
9. Threshold

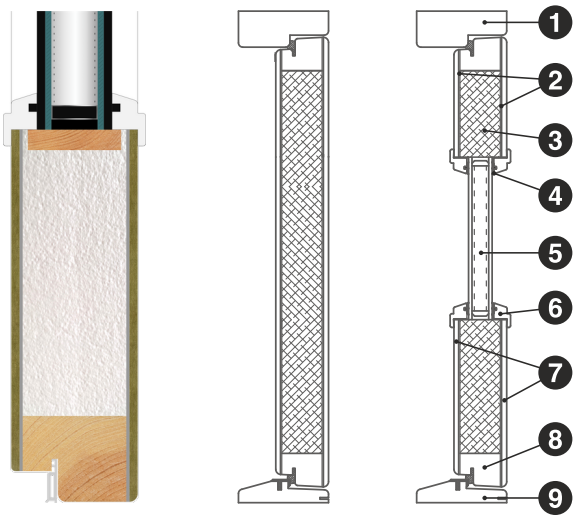

Available designs

opt-0

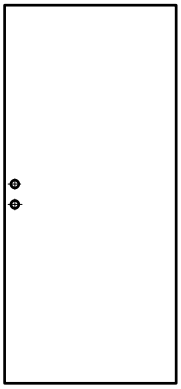

opt-1

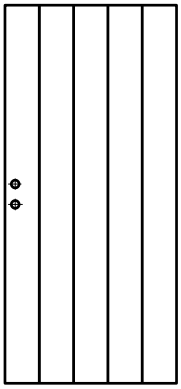

optG-6 glass

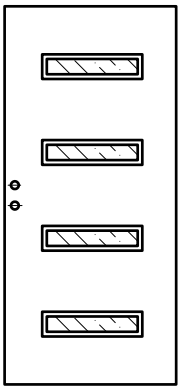

optG-10 glass

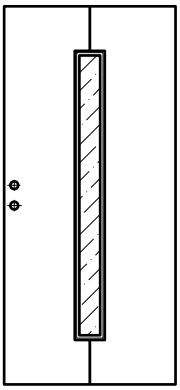

opt-SL-P

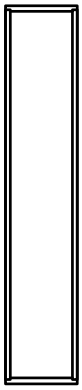

opt-SL-G0 glass

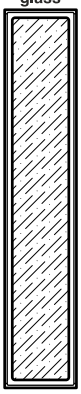

opt-SL-G0 2B2 glass

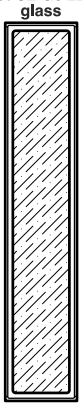

Frames for exterior doors

General information	
Product name	42x105, 42x115, 42x105NOR, 42x115NOR frame set
Class	unclassified
Weight (M9)	~14kg
Construction	Finger jointed wood
Decoration	1 layer - impregnation, 2 layer - primmer, 1 layer - paint
Standard color	NCS S0502-Y, gloss 25
Standart fittings	-
Lock plate	0034 or depend on selected lock case
Thresholds	26x105, 26x115, 26x105 hybrid, 26x115 hybrid
Non-standart size production	Available
Decoration according NCS / RAL	Any NCS or RAL color
Product quality warranty	5 years

Master plus production				
Min/max size	Min width	Max width	Min height	Max height
mm	686	1914	1789	2489
M size	7	19	18	25

42x105

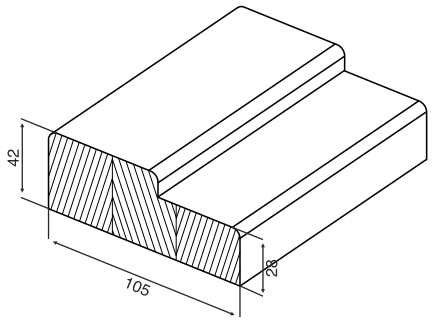

42x105NOR

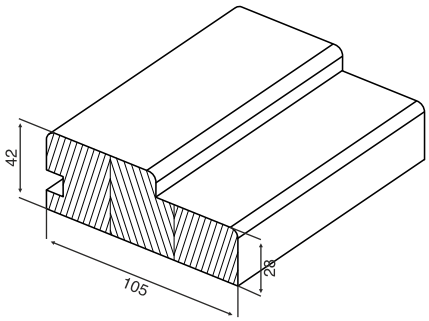

42x115

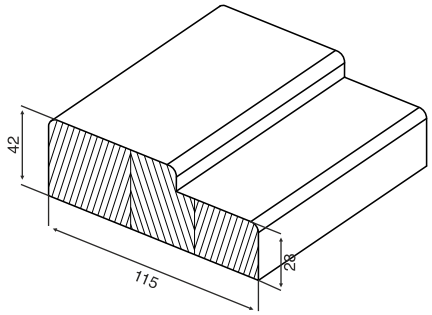

42x115NOR

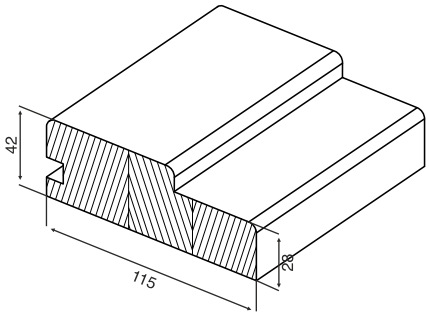

42x105, 42x115, 42x105NOR, 42x115NOR frame - top

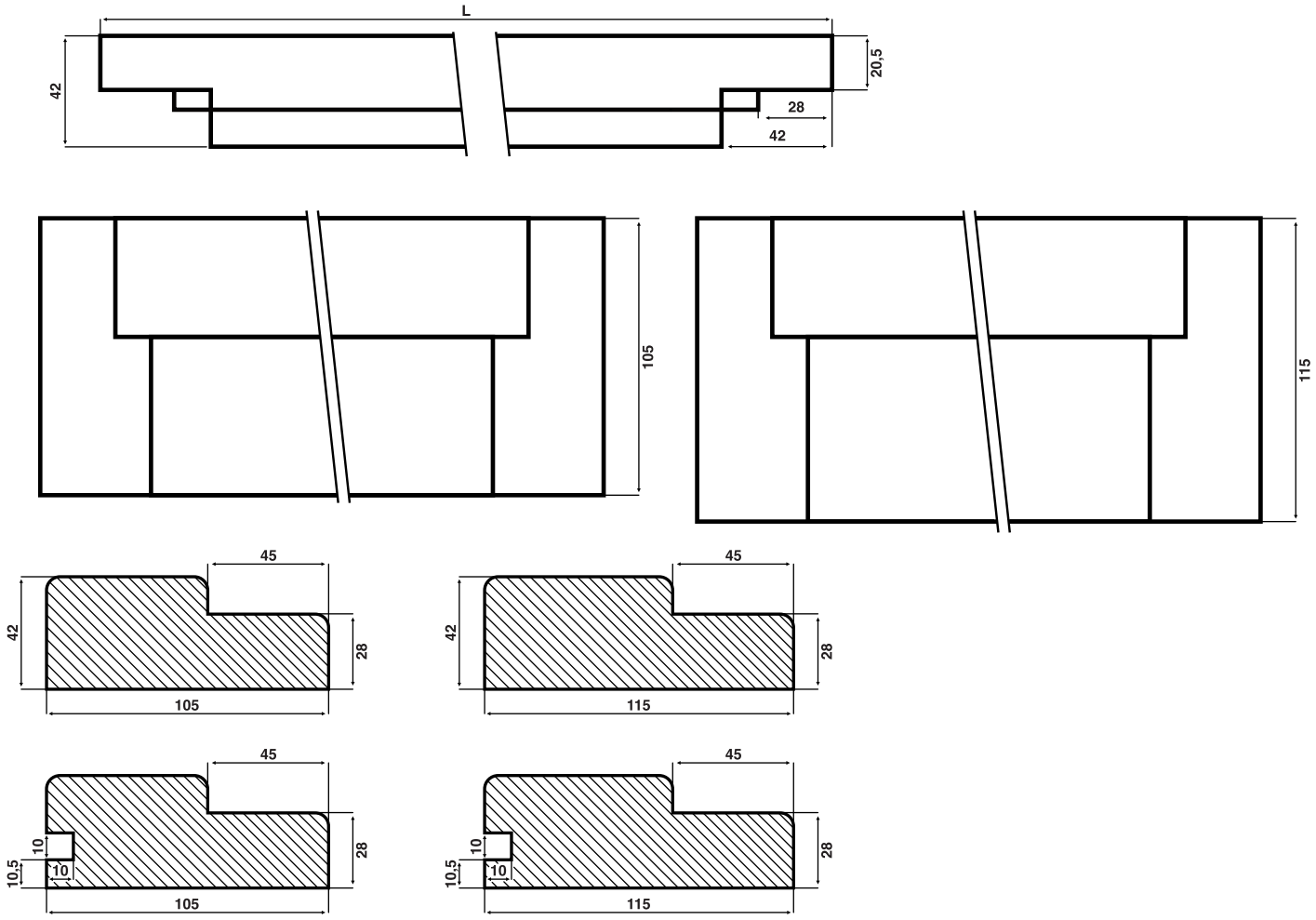

Dimensions are provided for standard dimensions door leaf

	M8	M9	M10	M13	M14	M15	M13.9	M14.9	M17	M19
Door leaf width	725	825	925	661+561	711+611	761+661	925+409	925+509	825+825	925+925
L - top length	786	886	986	1286	1386	1486	1398	1498	1714	1914

Danish market	M9.1	M9.7	M10.1
Door leaf width	827	887	927
L - top length	888	948	988

42x105, 42x115, 42x105NOR, 42x115NOR frame - sides

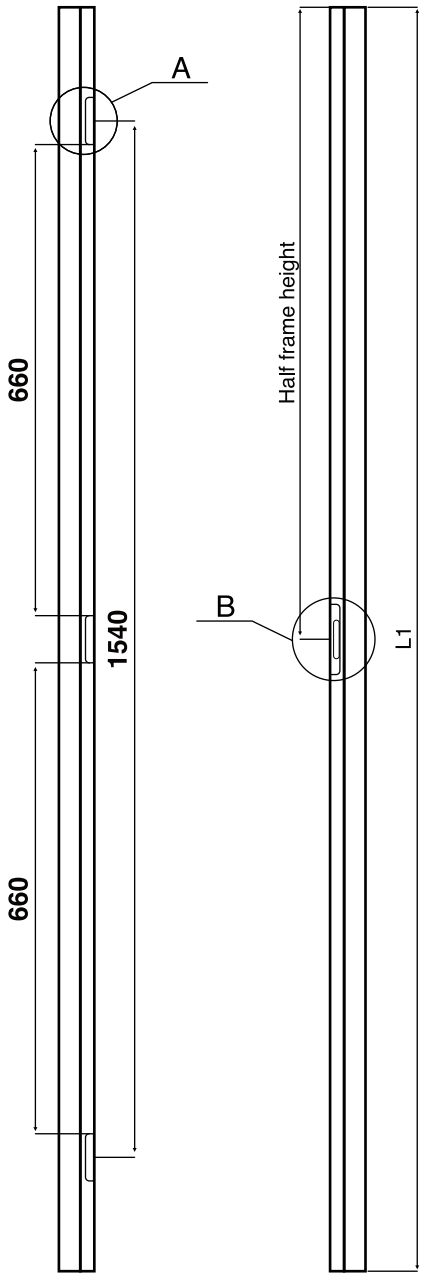

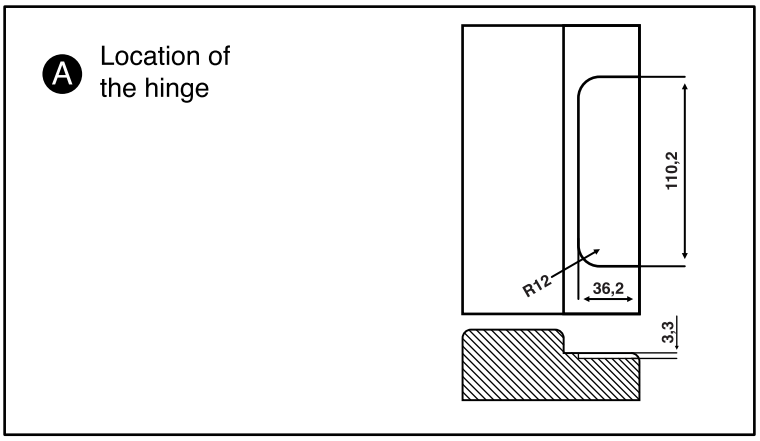

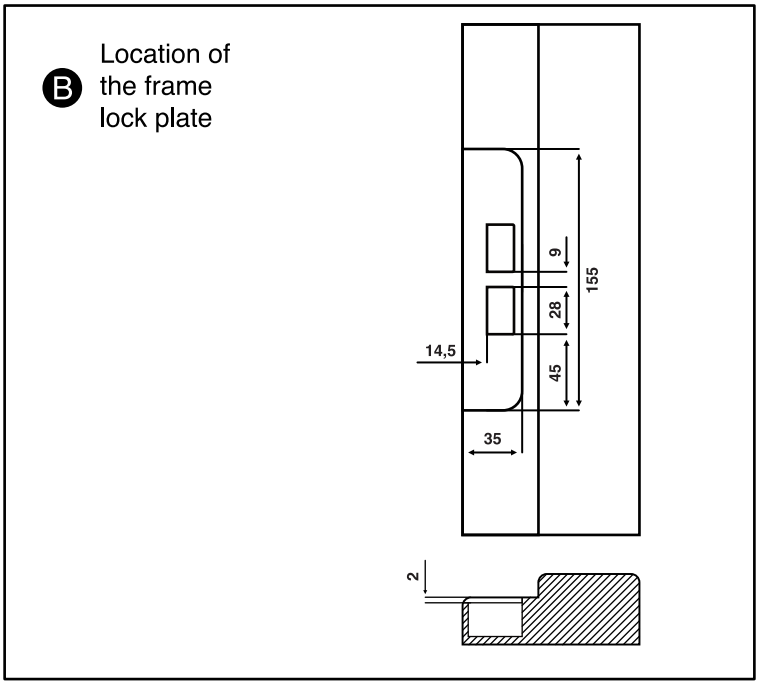

Dimensions are provided for standard dimensions door leaf

	M19	M20	M21
Door leaf height	1840	1940	2040
L1 - frame (side) height	1860	1960	2060
L2 - Gap to lock plate	852.5	902.5	952.5

Danish market	M19.1	M20.1	M20.8	M21.1	M21.45
Door leaf width	1832	1932	2002	2032	2067
L1 - frame (side) height	1851	1951	2021	2051	2086
L2 - Gap to lock plate	848	898	933	948	965.5

Thresholds for exterior doors

General information	
Product name	26x105, 26x115
Class	unclassified
Sound transmittance	-
Weight (M9)	~1kg
Construction	Finger joointed hardwood (see construction drawings for more detailed information).
Decoration	Transparent lacquering, 2 layers of lacquer
Standart fittings	-
Frame	42x105, 42x115, 42x105NOR, 42x115NOR
Non-standart size production	Available
Decoration according NCS / RAL	-
Product quality warranty	5 years

Master plus production		
Min/max size	Min width	Max width
mm	686	1914
M size	7	19

26x105/115 BG

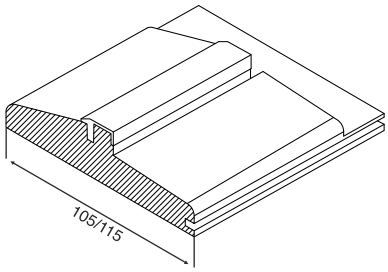

26x105/115 FG-BG

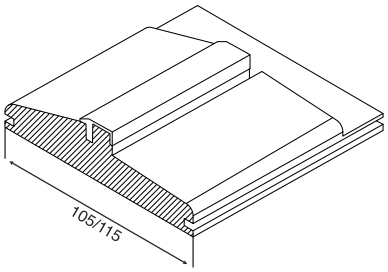

26x105/115 FG

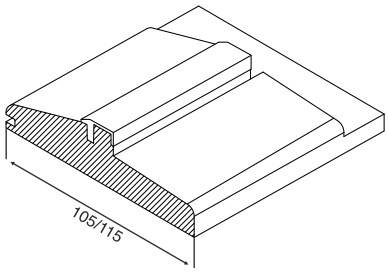

26x105/115

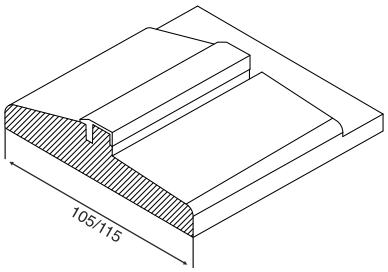

Thresholds for exterior doors (hybrid)

General information	
Product name	26x105 hybrid, 26x115 hybrid
Class	unclassified
Sound transmittance	-
Weight (M9)	~1kg
Construction	Finger joointed hardwood and aluminum profile (see construction drawings for more detailed information).
Decoration	Transparent lacquering, 2 layers of lacquer
Standart fittings	-
Frame	42x105, 42x115, 42x105NOR, 42x115NOR
Non-standart size production	Available
Decoration according NCS / RAL	-
Product quality warranty	5 years

Master plus production		
Min/max size	Min width	Max width
mm	686	1914
M size	7	19

26x105/115 Hybrid

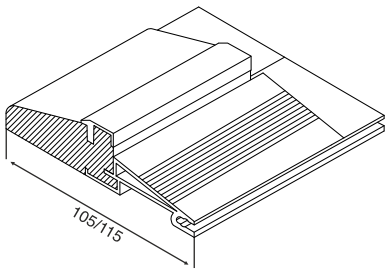

26x105, 26x115, 26x105 hybrid, 26x115 hybrid exterior thresholds

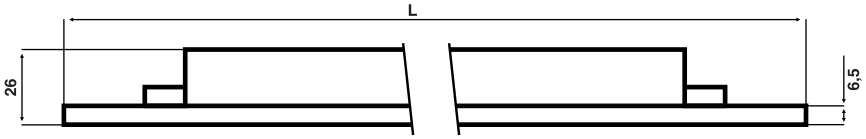

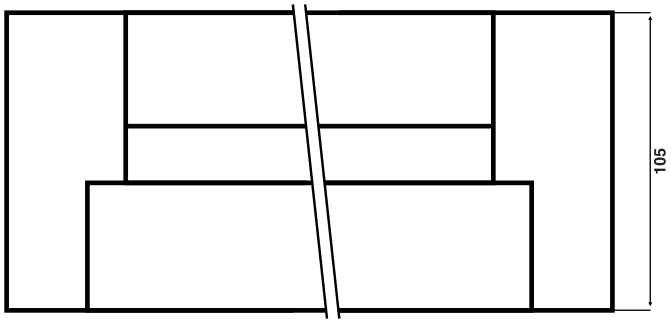

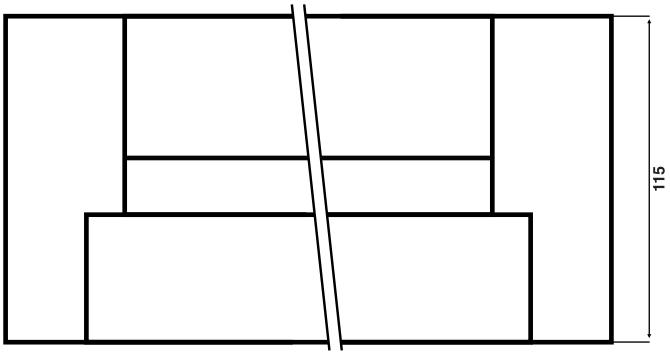

Dimensions are provided for standard dimensions door leaf

	M8	M9	M10	M13	M14	M15	M13.9	M14.9	M17	M19
Door leaf width	725	825	925	661+561	711+611	761+661	925+409	925+509	825+825	925+925
L - threshold length	786	886	986	1286	1386	1486	1398	1498	1714	1914

Danish market	M9.1	M9.7	M10.1
Door leaf width	827	887	927
L - threshold length	888	948	988

Gaps between door leaf and frame for single doors

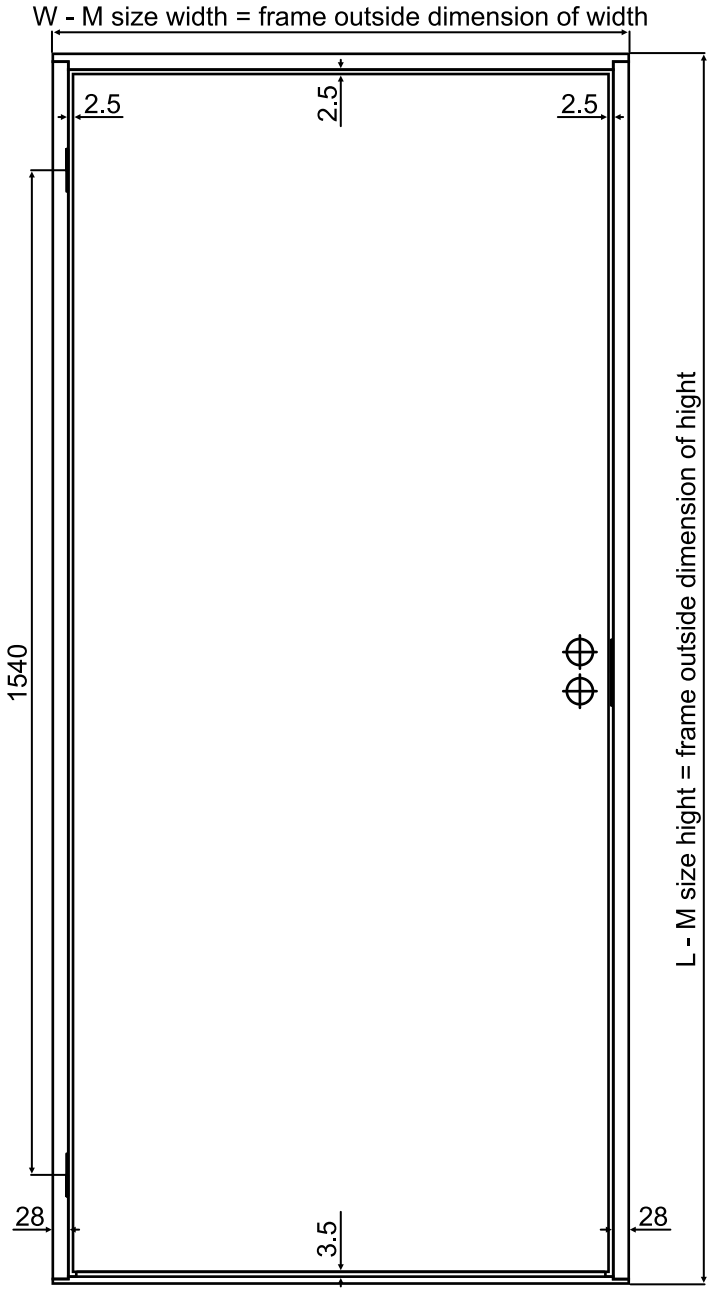

M size	L	W
19 x 8	1889	786
19 x 9	1889	886
19 x 10	1889	986
20 x 8	1989	786
20 x 9	1989	886
20 x 10	1989	986
21 x 8	2089	786
21 x 9	2089	886
21 x 10	2089	986

Danish market

M size	L	W
19.1 x 9.1	1880	888
19.1 x 9.7	1880	948
20.1 x 9.1	1980	888
20.1 x 9.7	1980	948
20.8 x 9.1	2050	888
20.8 x 9.7	2050	948
20.8 x 10.1	2050	988
21.1 x 9.1	2080	888
21.1 x 9.1	2080	948
21.45 x 9.1	2115	888
21.45 x 9.7	2115	948
21.45 x 10.1	2115	988

Gaps between door leaf and frame for double doors

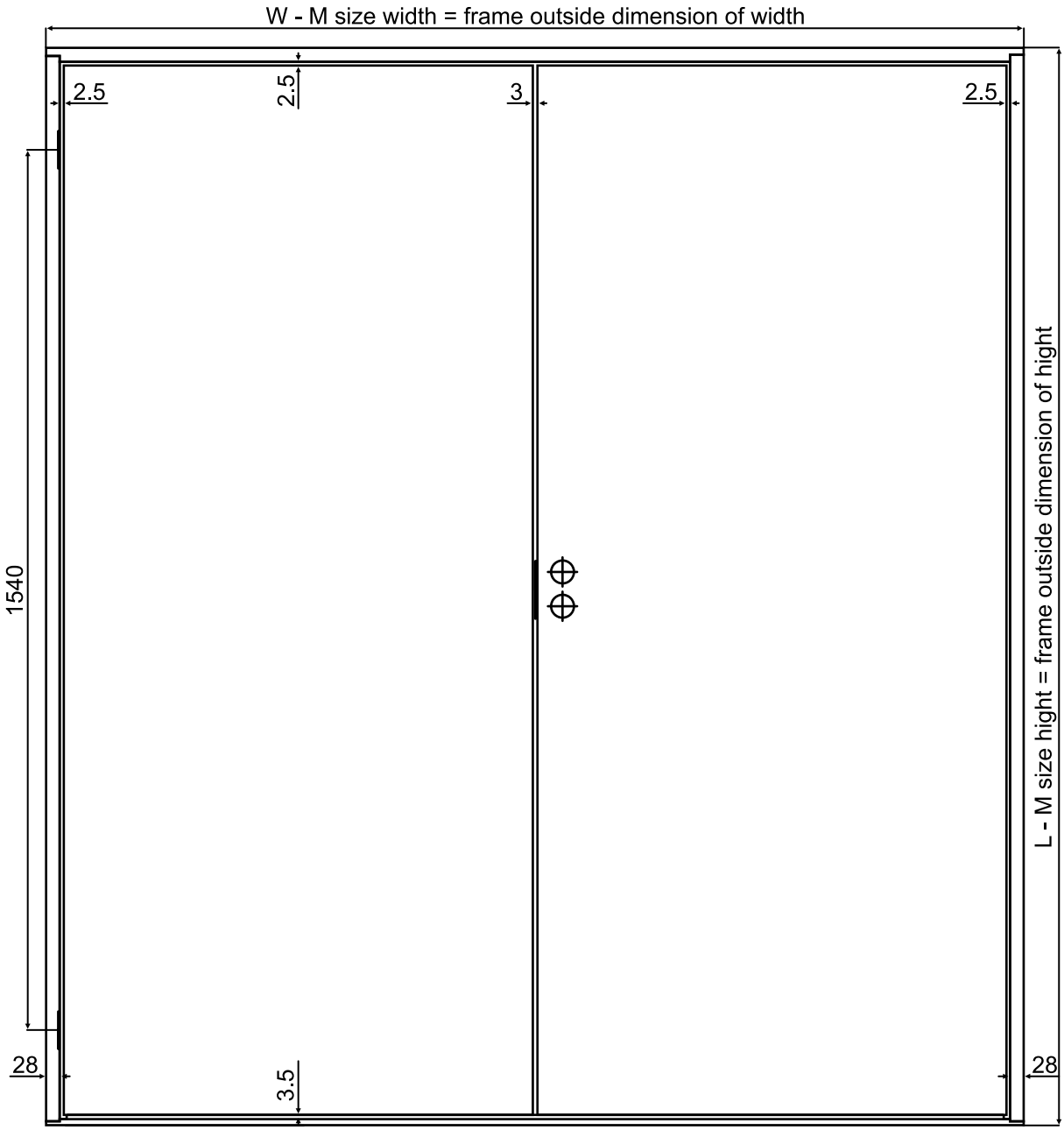

M size	L	W
19 x 13	1889	1286
19 x 14	1889	1386
19 x 15	1889	1486
19 x 13.9	1889	1398
19 x 14.9	1889	1498
19 x 17	1889	1714
19 x 19	1889	1914
20 x 13	1989	1286
20 x 14	1989	1386
20 x 15	1989	1486
20 x 13.9	1989	1398
20 x 14.9	1989	1498
20 x 17	1989	1714
20 x 19	1989	1914

M size	L	W
21 x 13	2089	1286
21 x 14	2089	1386
21 x 15	2089	1486
21 x 13.9	2089	1398
21 x 14.9	2089	1498
21 x 17	2089	1714
21 x 19	2089	1914

Painted, exterior doors dimensions table

Single door dimensions table (mm)

M Size	Door leaf size	Frame outside dimension	Door way
19 x 8 M	1840 x 725	1889 x 786	1900 x 800
19 x 9 M	1840 x 825	1889 x 886	1900 x 900
19 x 10 M	1840 x 925	1889 x 986	1900 x 1000
20 x 8 M	1940 x 725	1989 x 786	2000 x 800
20 x 9 M	1940 x 825	1989 x 886	2000 x 900
20 x 10 M	1940 x 925	1989 x 986	2000 x 1000
21 x 8 M	2040 x 725	2089 x 786	2100 x 800
21 x 9 M	2040 x 825	2089 x 886	2100 x 900
21 x 10 M	2040 x 925	2089 x 986	2100 x 1000

Double door dimensions table (mm)

M Size	Door leaf size	Frame outside dimension	Door way
19 x 13 M	1840 x 661/561f	1889 x 1286	1900 x 1300
19 x 14 M	1840 x 711/611f	1889 x 1386	1900 x 1400
19 x 15 M	1840 x 761/661f	1889 x 1486	1900 x 1500
19 x 13.9 M	1840 x 925/409f	1889 x 1398	1900 x 1412
19 x 14.9 M	1840 x 925/509f	1889 x 1498	1900 x 1512
19 x 17 M	1840 x 825/825f	1889 x 1714	1900 x 1728
19 x 19 M	1840 x 925/925f	1889 x 1914	1900 x 1928
20 x 13 M	1940 x 661/561f	1989 x 1286	2000 x 1300
20 x 14 M	1940 x 711/611f	1989 x 1386	2000 x 1400
20 x 15 M	1940 x 761/661f	1989 x 1486	2000 x 1500
20 x 13.9 M	1940 x 925/409f	1989 x 1398	2000 x 1412
20 x 14.9 M	1940 x 925/509f	1989 x 1498	2000 x 1512
20 x 17 M	1940 x 825/825f	1989 x 1714	2000 x 1728
20 x 19 M	1940 x 925/925f	1989 x 1914	2000 x 1928
21 x 13 M	2040 x 661/561f	2089 x 1286	2100 x 1300
21 x 14 M	2040 x 711/611f	2089 x 1386	2100 x 1400
21 x 15 M	2040 x 761/661f	2089 x 1486	2100 x 1500
21 x 13.9 M	2040 x 925/409f	2089 x 1398	2100 x 1412
21 x 14.9 M	2040 x 925/509f	2089 x 1498	2100 x 1512
21 x 17 M	2040 x 825/825f	2089 x 1714	2100 x 1728
21 x 19 M	2040 x 925/925f	2089 x 1914	2100 x 1928

Sidepart dimensions table (mm)

M Size	Door leaf size	Frame outside dimension	Door way
19 x 3 M		1889 x 298	1900 x 300
19 x 4 M		1889 x 398	1900 x 400
19 x 5 M		1889 x 498	1900 x 500
19 x 6 M		1889 x 598	1900 x 600
20 x 3 M		1989 x 298	2000 x 300
20 x 4 M		1989 x 398	2000 x 400
20 x 5 M		1989 x 498	2000 x 500
20 x 6 M		1989 x 598	2000 x 600
21 x 3 M		2089 x 298	2100 x 300
21 x 4 M		2089 x 398	2100 x 400
21 x 5 M		2089 x 498	2100 x 500
21 x 6 M		2089 x 598	2100 x 600

Painted, exterior doors dimensios table

Danish market, single door dimensions table (mm)

M Size	Door leaf size	Frame outside dimension	Door way
19.1 x 9.1 M	1832 x 827	1880 x 888	1892 x 900
19.1 x 9.7 M	1832 x 887	1880 x 948	1892 x 960
20.1 x 9.1 M	1932 x 827	1980 x 888	1992 x 900
20.1 x 9.7 M	1932 x 887	1980 x 948	1992 x 960
20.8 x 9.1 M	2002 x 827	2050 x 888	2060 x 900
20.8 x 9.7 M	2002 x 887	2050 x 948	2060 x 960
20.8 x 10.1 M	2002 x 927	2050 x 988	2060 x 1000
21.1 x 9.1 M	2032 x 827	2080 x 888	2090 x 900
21.1 x 9.7 M	2032 x 887	2080 x 948	2090 x 960
21.45 x 9.1 M	2067 x 827	2115 x 888	2125 x 900
21.45 x 9.7 M	2067 x 887	2115 x 948	2125 x 960
21.45 x 10.1 M	2067 x 927	2115 x 988	2125 x 1000